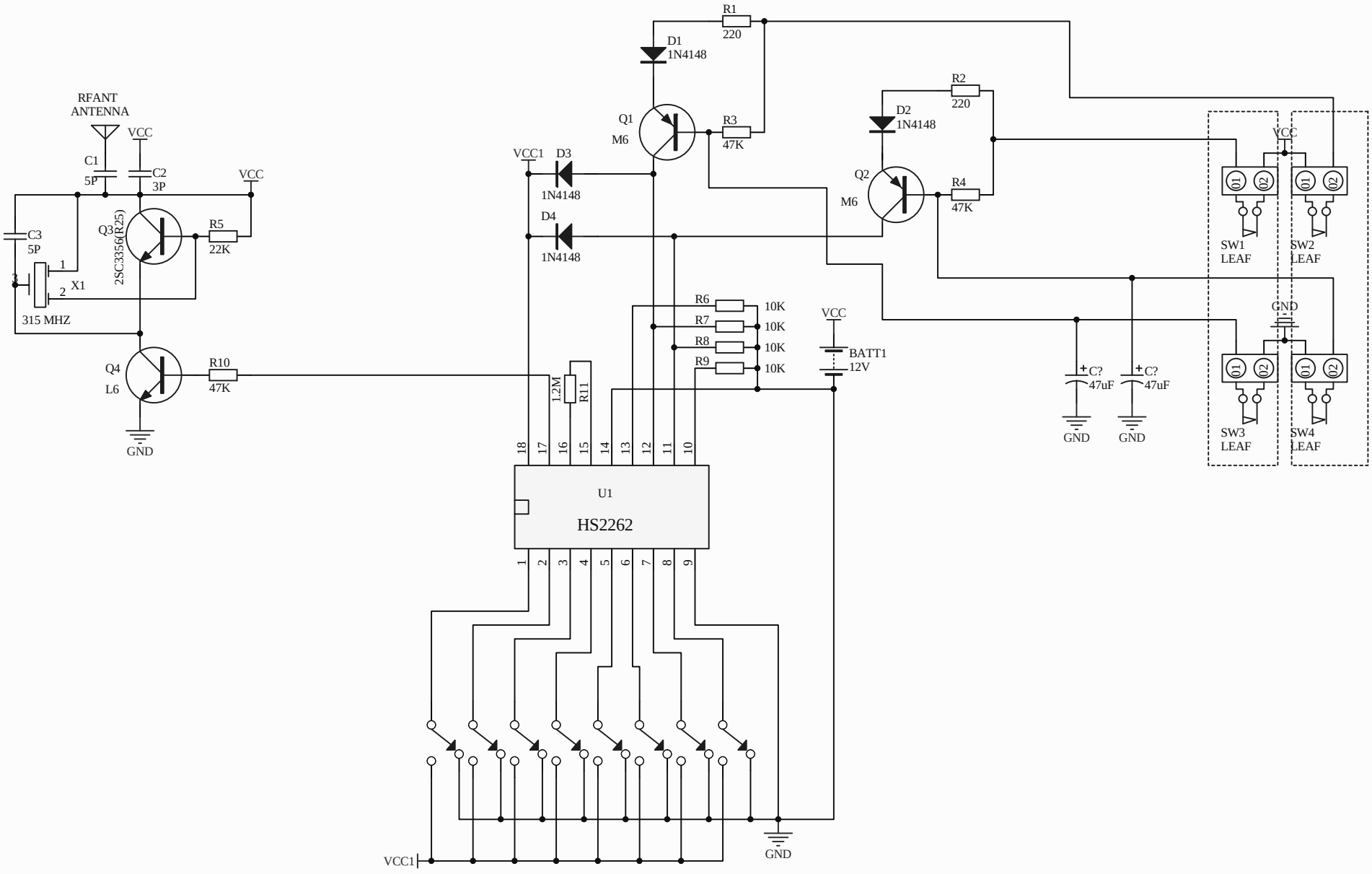

Title	杰巍祥和实业有限公司	
Size A4	Number JW-3020A-TX	Revision REV:01
Date: 2008-11-26		Sheet of
File: E:\hejr-PCB\JW-3020\JW-3020A-TX.SchDoc		Drawn By: