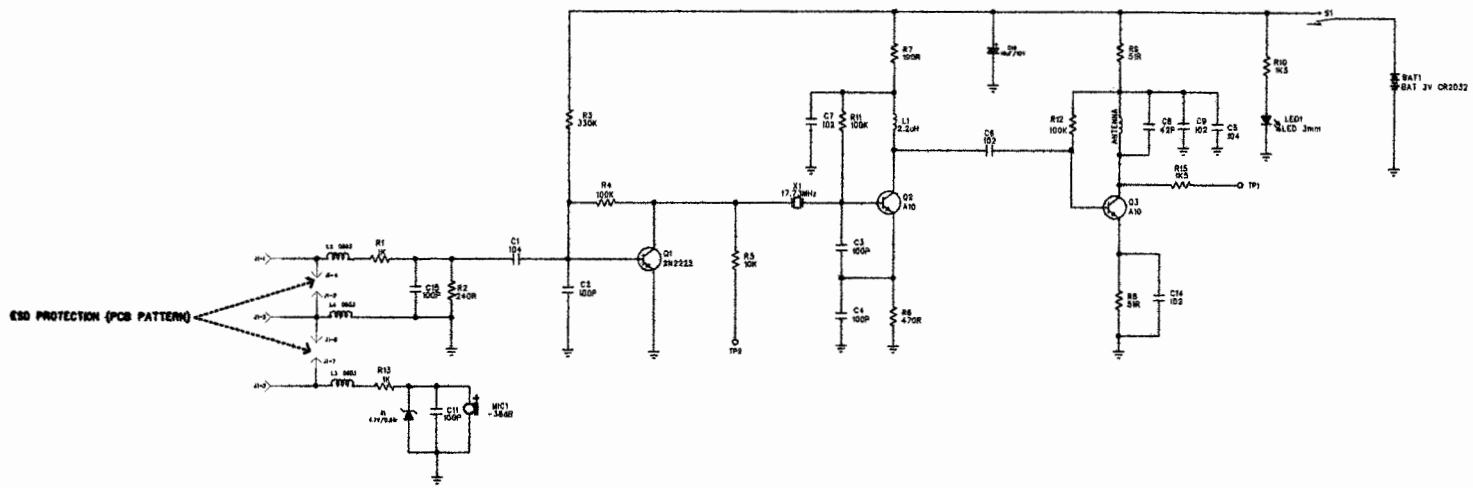

Change History Rev:A ==>>Rev:B

Change:
36 PF 50V +/-10% NPO 0603 TO 42 PF 50V +/-10% NPO 0603

And:

Date:

NEWTRONIC INTERNATIONAL CO ., LTD			
MODEL:	BJ	DWN BY:	XH QIU
FILE NAME:	BJ-V1.4.SCH	CHK BY:	
PCB NAME: MAIN BOARD:	*	APPR BY:	
PCB NAME: KEY BOARD:	*	DATE:	Nov.-30-2006
PCB NAME: CPU BOARD:	*	SHEET: 1/1	REV: 1.4