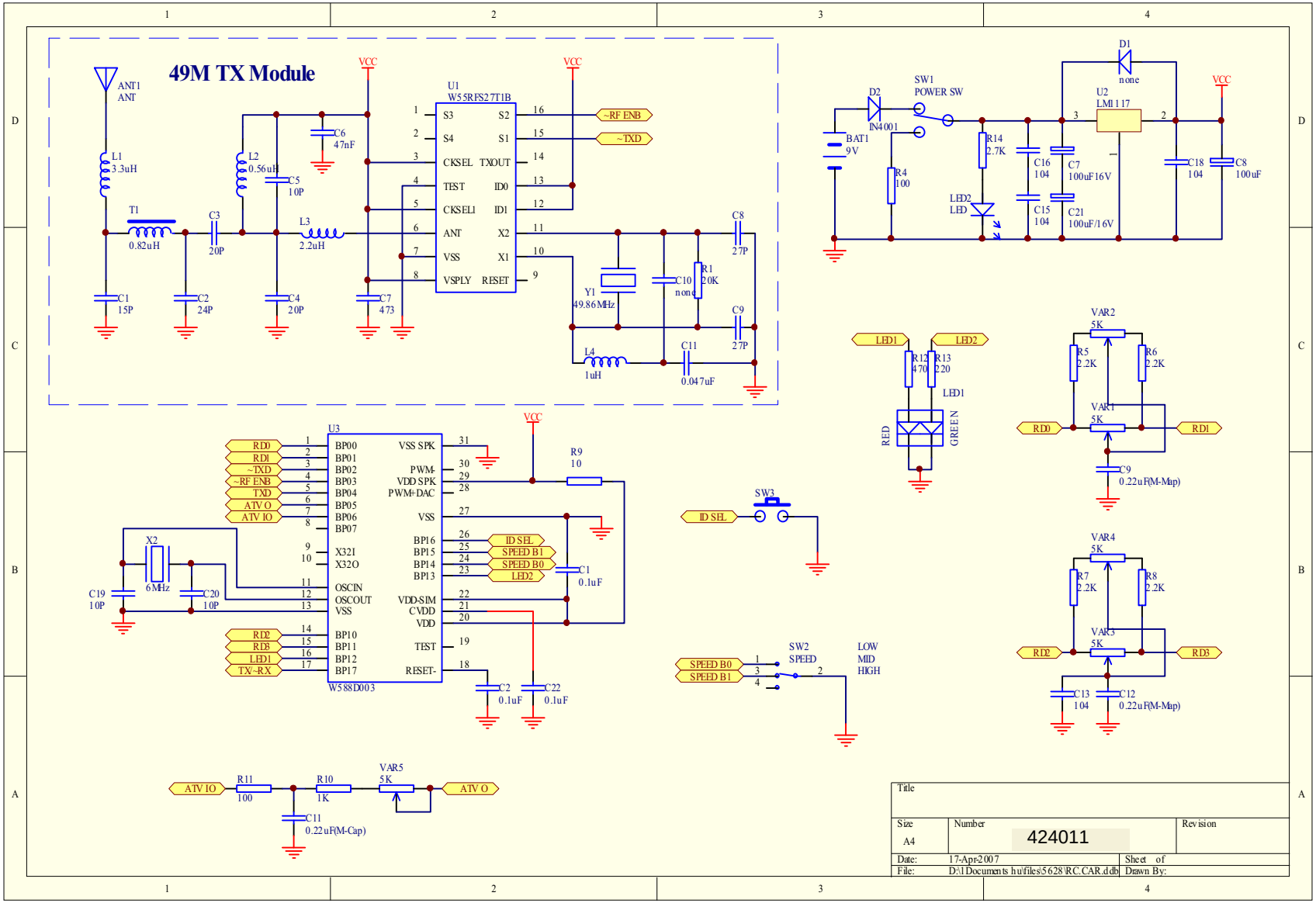
49M TX Module
ANT1
ANT
L1
3.3uH
T1
0.82uH
C1
15P
C2
24P
C3
20P
L2
0.56uH
C5
10P
C4
20P
L3
2.2uH
C6
47nF
C7
473
VCC
U1
W55RFS27T1B
S3
S4
CKSEL
TEST
CKSEL1
ANT
VSS
VSPLY
S2
S1
TXOUT
ID0
ID1
X2
X1
RESET
~RF ENB
~TXD
C8
27P
C9
27P
Y1
49.86MHz
C10
none
R1
20K
L4
1uH
C11
0.047uF
D1
none
D2
IN4001
SW1
POWER SW
BAT1
9V
R4
100
R14
2.7K
LED2
LED
C16
104
C15
104
C7
100uF16V
C21
100uF/16V
U2
LM1117
C18
104
C8
100uF
LED1
LED2
R12
470
R13
220
RED
GREEN
VAR2
5K
R5
2.2K
R6
2.2K
VAR1
5K
RD0
RD1
C9
0.22uF(M-Map)
U3
BP00
BP01
BP02
BP03
BP04
BP05
BP06
BP07
X32I
X32O
OSCIN
OSCOUT
VSS
BP10
BP11
BP12
BP17
VSS SPK
PWM-
VDD SPK
PWM-DAC
VSS
BP16
BP15
BP14
BP13
VDD-SIM
CVDD
VDD
TEST
RESET-
W588D003
RD0
RD1
~TXD
~RF ENB
TXD
ATV O
ATV IO
RD2
RD3
LED1
TX/~RX
ID SEL
SPEED B1
SPEED B0
LED2
X2
6MHz
C19
10P
C20
10P
R9
10
C1
0.1uF
C2
0.1uF
C22
0.1uF
SW3
ID SEL
SPEED B0
SPEED B1
SW2
SPEED
LOW
MID
HIGH
VAR4
5K
R7
2.2K
R8
2.2K
VAR3
5K
RD2
RD3
C13
104
C12
0.22uF(M-Map)
ATV IO
R11
100
R10
1K
VAR5
5K
ATV O
C11
0.22uF(M-Cap)
Title
Size
A4
Number
424011
Revision
Date:
17-Apr-2007
Sheet of
File:
D:\1Documents hu\files\5628\RC.CAR.ddb
Drawn By: