| REVISION RECORD | | | |
|---|---|---|---|
| LTR | ECO NO: | APPROVED: | DATE: |
| | | | |
| | | | |
| | | | |
| | | | |

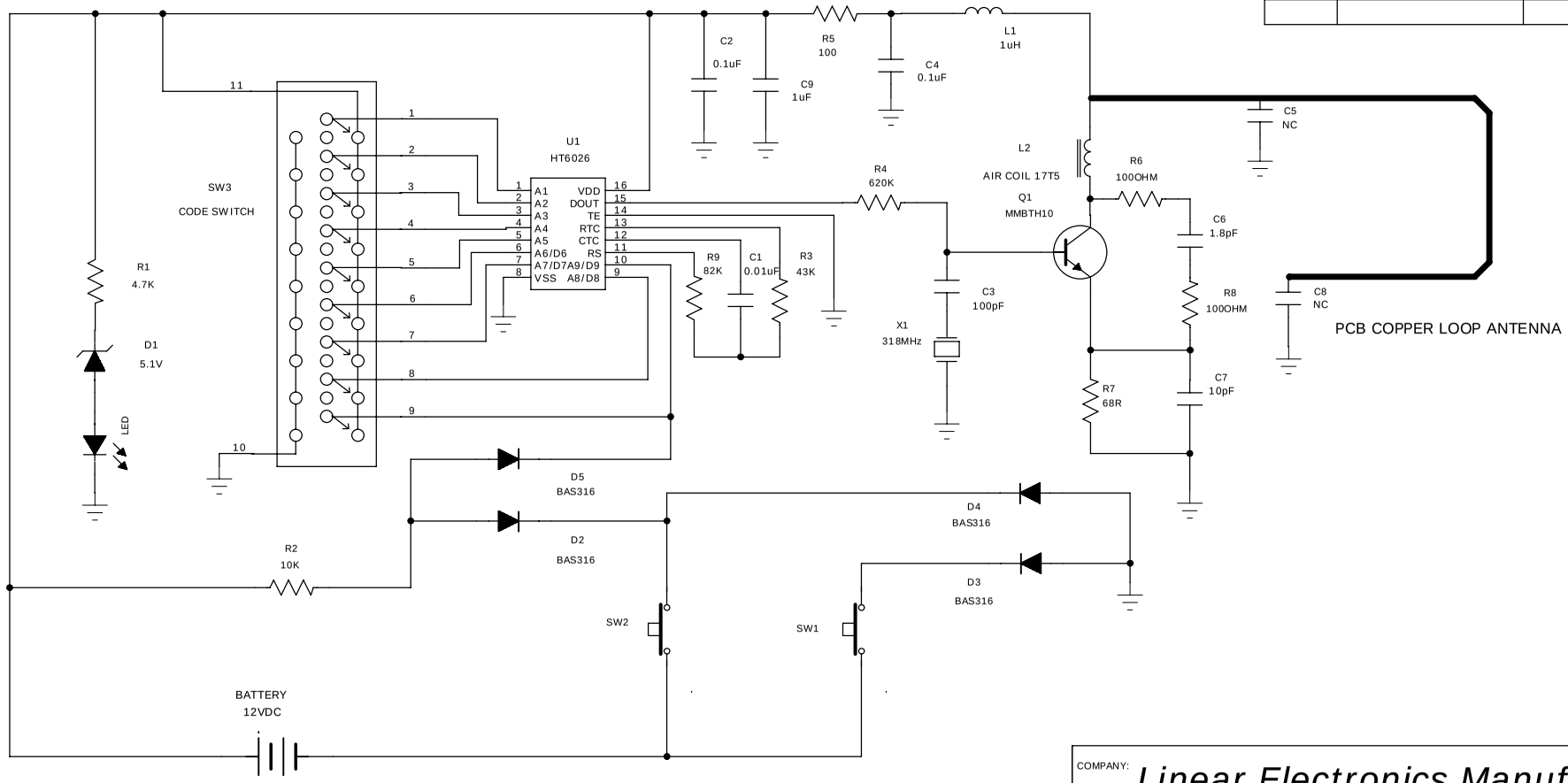


Remarking : R2, D2 , D5 not installed for 1 button

| | | | |
|---|---|---|---|
| DESIGN: SLLI | DATED: 25FEB2008 | COMPANY: *Linear Electronics Manufactory* | |
| CHECKED: X.W.LI | DATED: 25FEB2008 | TITLE: GTO Transmitter Schematic (2 button) RB741/RB742 ( 318MHz ) | |
| APPROVED : PILCHER | DATED: 25FEB2008 | CODE: 00 | SIZE: A4 |
| RELEASED: | DATED: 25FEB2008 | DRAWING NO: 183-0089 | REV: X7 |
| | | SCALE: 1:1 | SHEET: 1 OF 1 |