REVISION RECORD			
LTR	ECO NO:	APPROVED:	DATE:

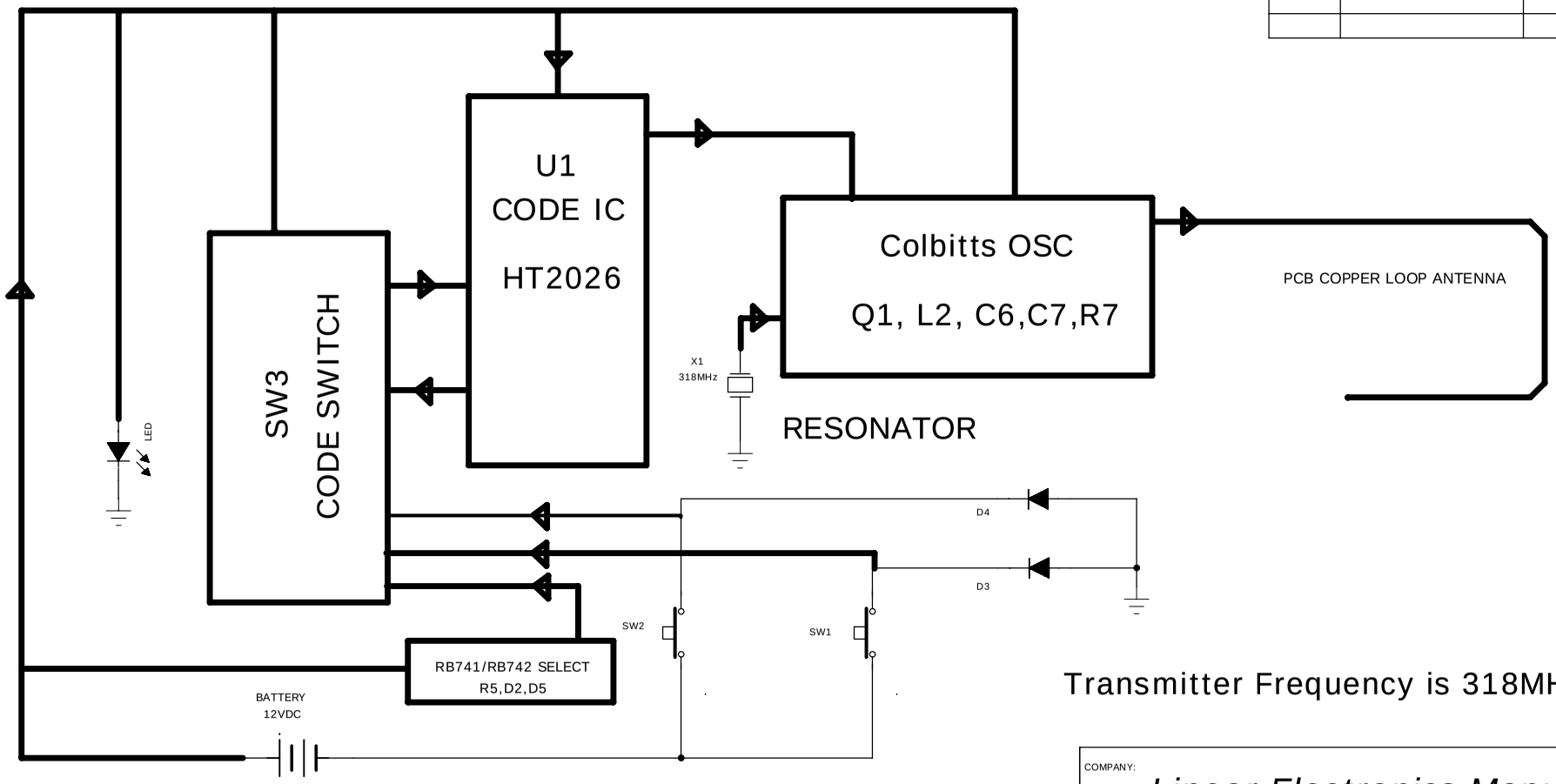

Transmitter Frequency is 318MHz

COMPANY: *Linear Electronics Manufactory*			
TITLE: GTO Transmitter Block Drawing RB741/RB742 (318MHz)			
CODE: 00	SIZE: A4	DRAWING NO: 183-0089	REV: X7
SCALE: 1:1		SHEET: 1 OF 1	

DESIGN: SLLI	DATED: 25FEB2008
CHECKED: X.W.LI	DATED: 25FEB2008
APPROVED : PILCHER	DATED: 25FEB2008
RELEASED:	DATED: 25FEB2008