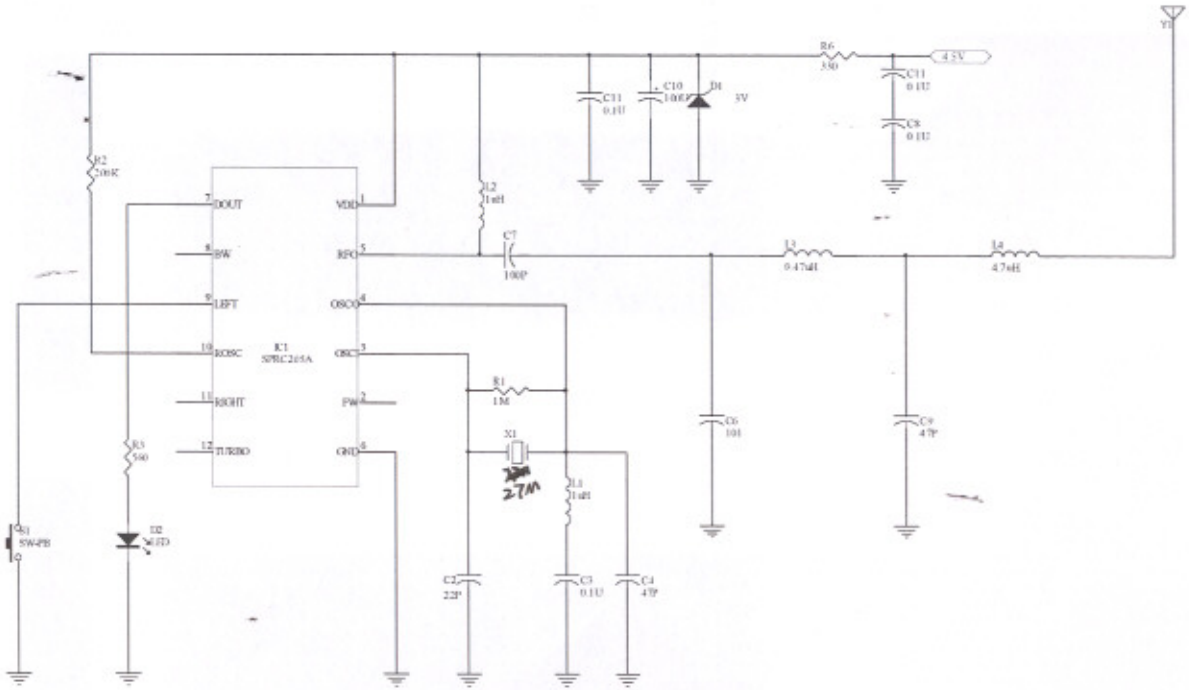
R6
330
4.5V
C11
0.1U
C10
100U
D1
3V
C11
0.1U
C8
0.1U
Y1
R2
200K
DOUT
BW
LEFT
RCOSC
RIGHT
TURBO
VDD
RFO
OSCO
OSCI
PW
GND
IC1
SPRC205A
L2
1uH
C7
100P
L3
0.47uH
L4
4.7uH
R1
1M
X1
27M
L1
1uH
C6
101
C9
47P
R3
560
D2
LED
S1
SW-PB
C2
22P
C3
0.1U
C4
47P
Title
Size
A4
Number
Revision
Date
23-Mar-2007
Sheet of
File
Drawn By: