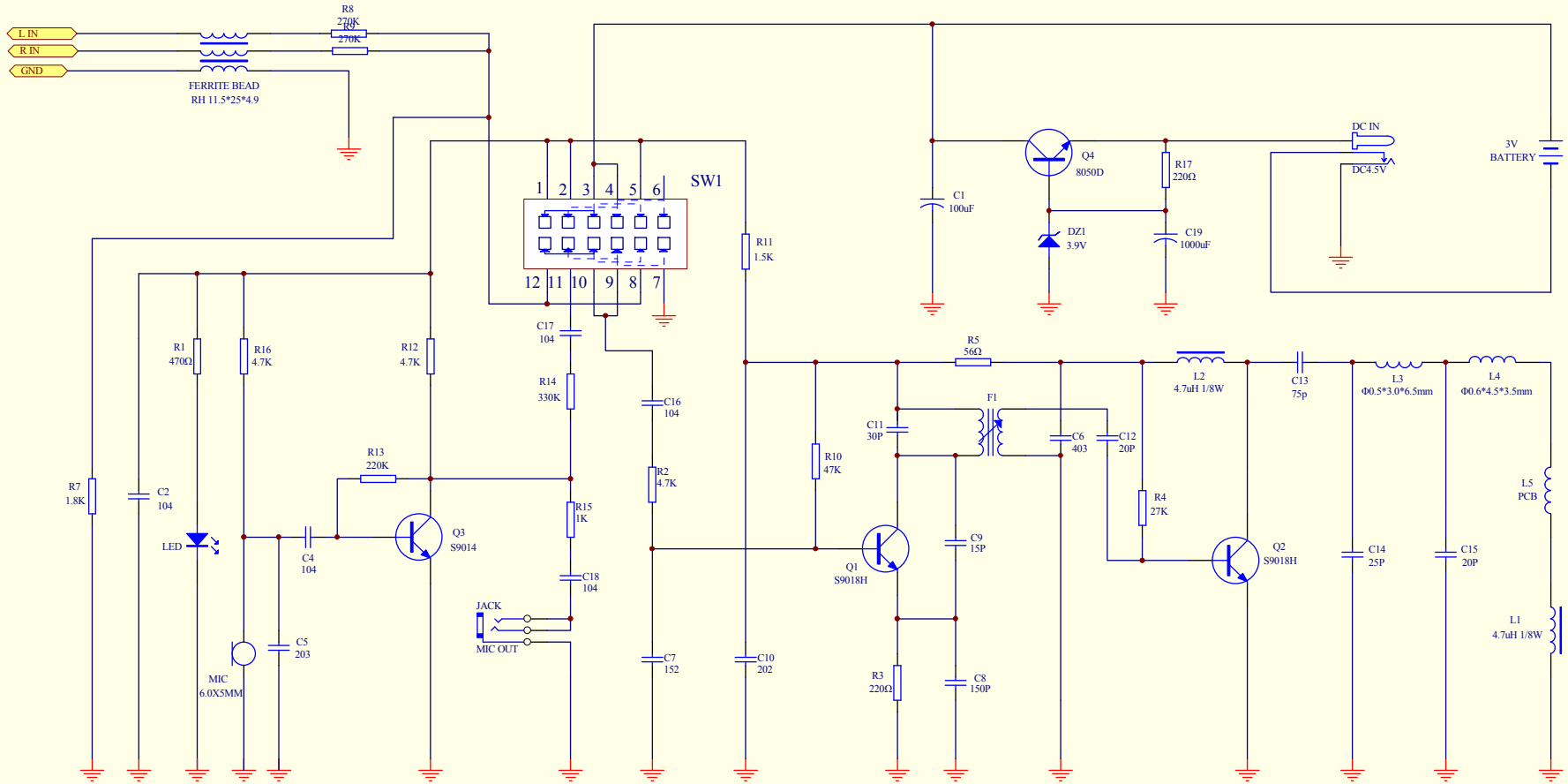

POLYTAK ENTERPRISES LTD

MODE CODE:	FM HI-FI Wirelsee Earphone(transmit)	REV 01R0	SIZE A4
FILE NO. BD/WI-10-GC-H001A		DATA: 11-Apr-2007	
DRAWING:	AUDITING:	AUTHORIZE:	SHEET 1 OF 1