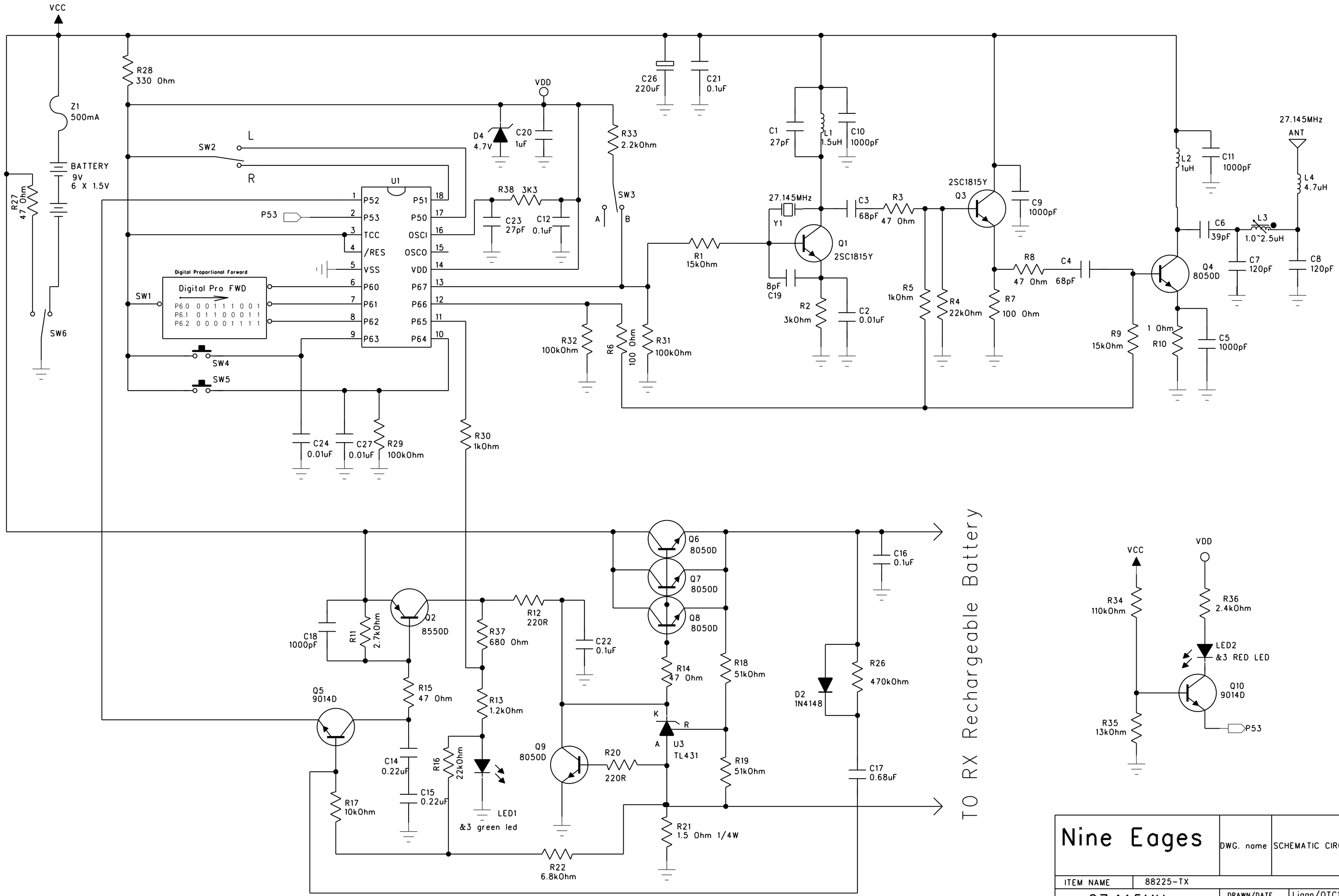

Nine Eages		DWG. name	SCHEMATIC CIRCUIT
ITEM NAME	88225-TX		
27.145MHz		DRAWN/DATE	Liqan/OTC11-2007
		CHK/DATE	
PAGE	1 OF 1	APP/DATE	

88225-TX.sch-1 - Fri Oct 12 09:38:54 2007