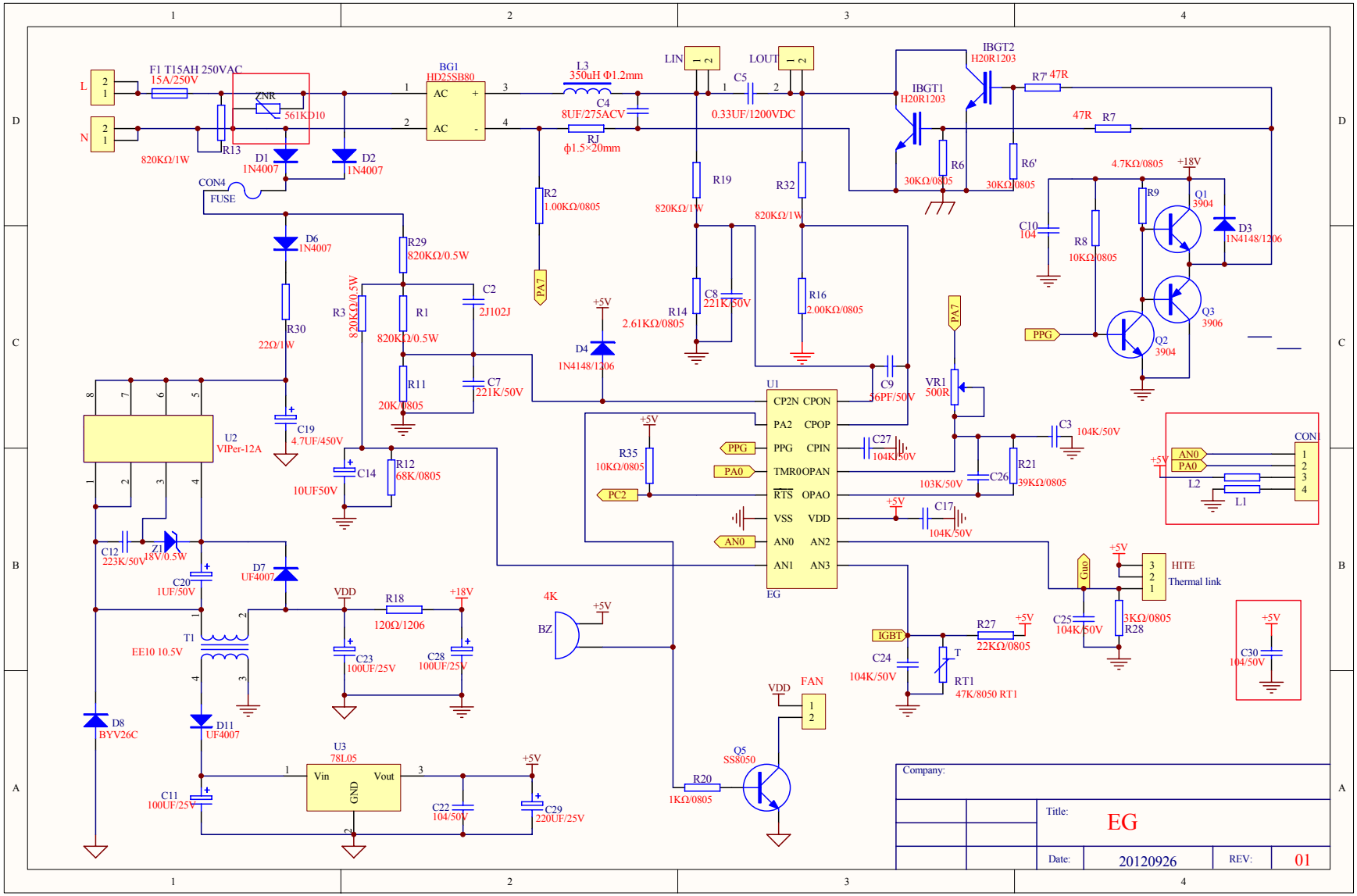
F1 T15AH 250VAC
15A/250V
ZNR
561KD10
R13
820KΩ/1W
D1
1N4007
D2
1N4007
CON4
FUSE
BG1
HD25SB80
AC
AC
L3
350uH Φ1.2mm
C4
8UF/275ACV
RJ
ϕ1.5×20mm
LIN
LOUT
C5
0.33UF/1200VDC
IBGT1
H20R1203
IBGT2
H20R1203
R7' 47R
47R R7
R6
30KΩ/0805
R6'
30KΩ/0805
4.7KΩ/0805
+18V
R9
Q1
3904
D3
1N4148/1206
C10
104
R8
10KΩ/0805
Q3
3906
Q2
3904
PPG
R2
1.00KΩ/0805
PA7
R19
820KΩ/1W
R32
820KΩ/1W
R14
2.61KΩ/0805
C8
221K/50V
R16
2.00KΩ/0805
D6
1N4007
R29
820KΩ/0.5W
R3
820KΩ/0.5W
R1
820KΩ/0.5W
C2
2J102J
R11
20K/0805
C7
221K/50V
R30
22Ω/1W
C19
4.7UF/450V
C14
10UF50V
R12
68K/0805
+5V
D4
1N4148/1206
C9
56PF/50V
VR1
500R
U1
CP2N CPON
PA2 CPOP
PPG CPIN
TMR0 OPAN
RTS OPAO
VSS VDD
AN0 AN2
AN1 AN3
EG
C27
104K/50V
R35
10KΩ/0805
PC2
PA0
AN0
C3
104K/50V
R21
39KΩ/0805
C26
103K/50V
C17
104K/50V
CON1
L2
L1
U2
VIPer-12A
C12
223K/50V
Z1
18V/0.5W
C20
1UF/50V
D7
UF4007
T1
EE10 10.5V
VDD
R18
120Ω/1206
C23
100UF/25V
C28
100UF/25V
4K
BZ
IGBT
R27
22KΩ/0805
C24
104K/50V
RT1
47K/8050 RT1
Guo
HITE
Thermal link
C25
104K/50V
3KΩ/0805
R28
C30
104/50V
FAN
D8
BYV26C
D11
UF4007
U3
78L05
Vin
Vout
GND
C11
100UF/25V
C22
104/50V
C29
220UF/25V
R20
1KΩ/0805
Q5
SS8050
Company:
Title:
EG
Date:
20120926
REV:
01

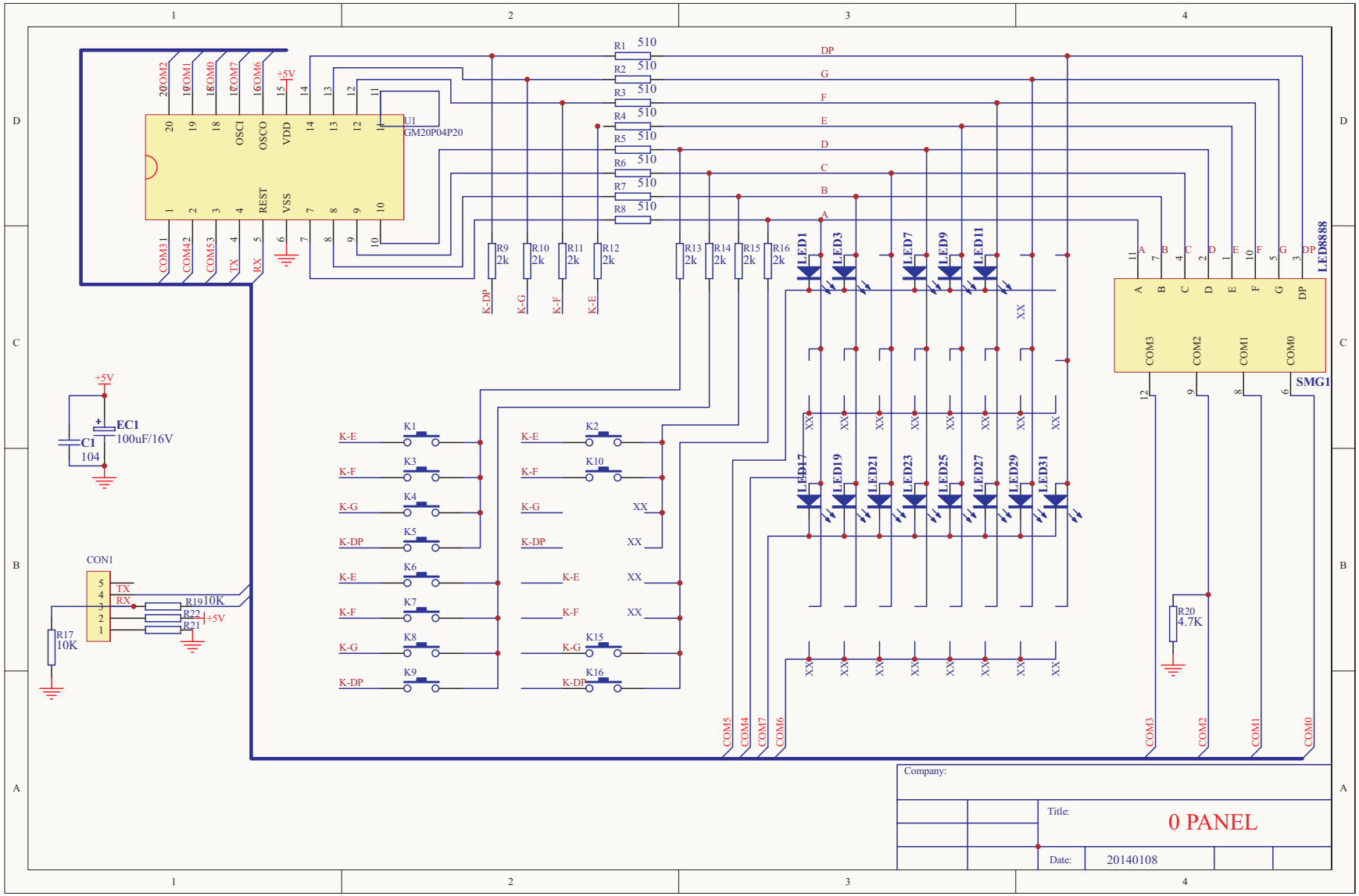
U1
GM20P04P20
OSCI
OSCO
VDD
REST
VSS
COM31
COM42
COM53
TX
RX
COM6
COM7
COM0
COM1
COM2
COM3
COM4
COM5
+5V
R1 510
R2 510
R3 510
R4 510
R5 510
R6 510
R7 510
R8 510
R9 2k
R10 2k
R11 2k
R12 2k
R13 2k
R14 2k
R15 2k
R16 2k
DP
G
F
E
D
C
B
A
K-DP
K-G
K-F
K-E
LED1
LED3
LED7
LED9
LED11
LED17
LED19
LED21
LED23
LED25
LED27
LED29
LED31
LED8888
SMG1
XX
K1
K2
K3
K4
K5
K6
K7
K8
K9
K10
K15
K16
EC1
100uF/16V
C1
104
CON1
R17
10K
R19 10K
R22
R21
R20
4.7K
Company:
Title:
0 PANEL
Date:
20140108