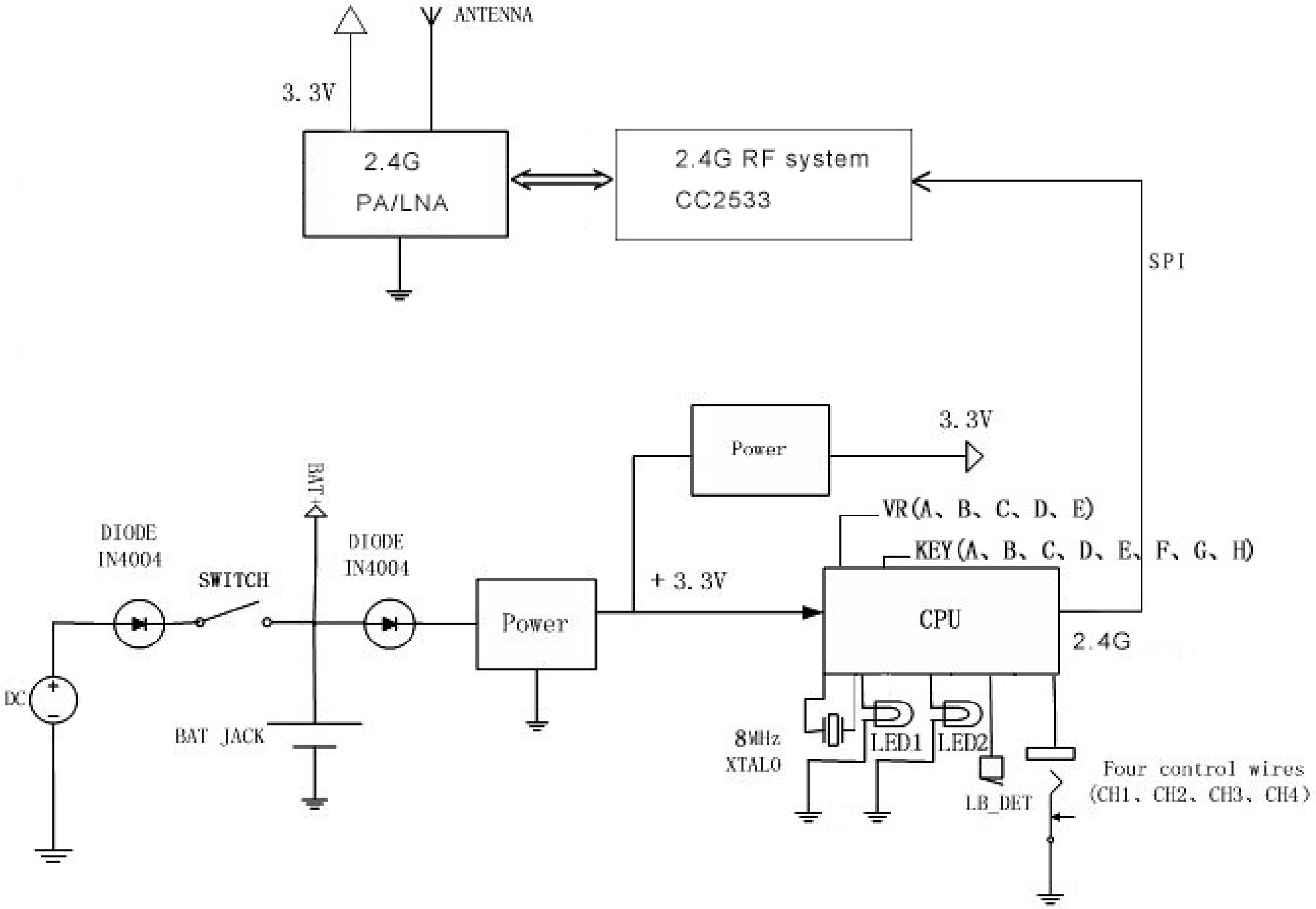

2.4G Transmitter block drawing