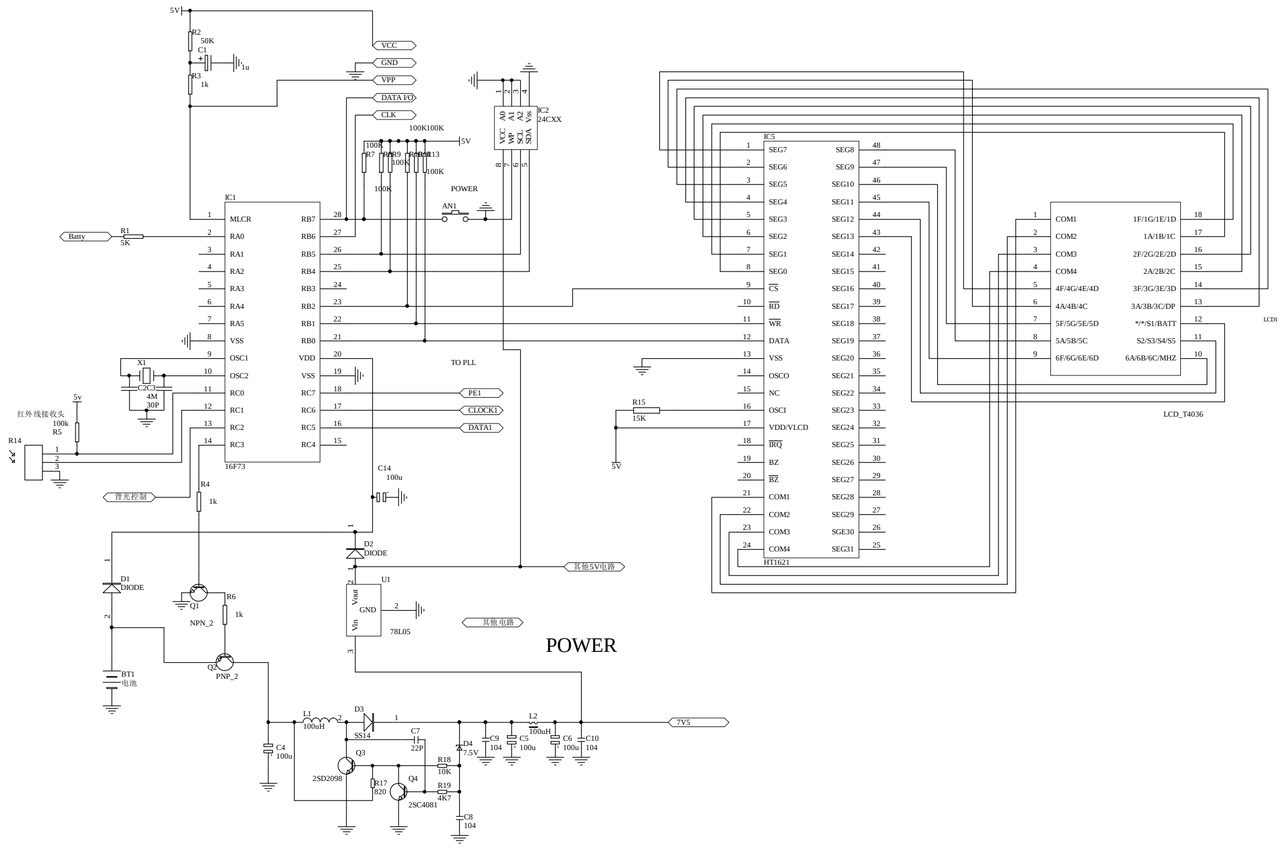

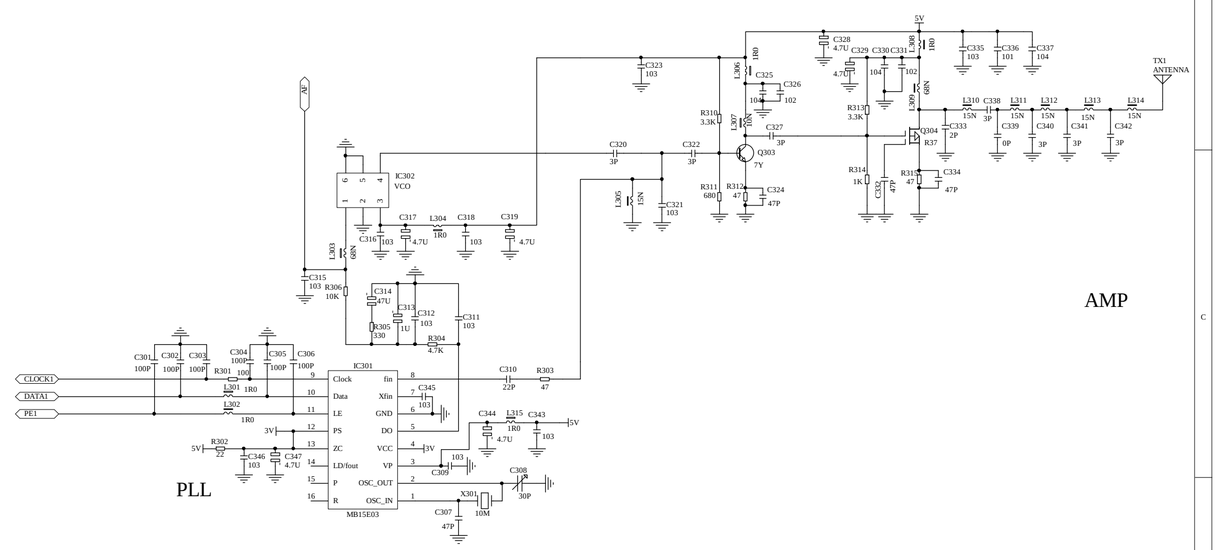

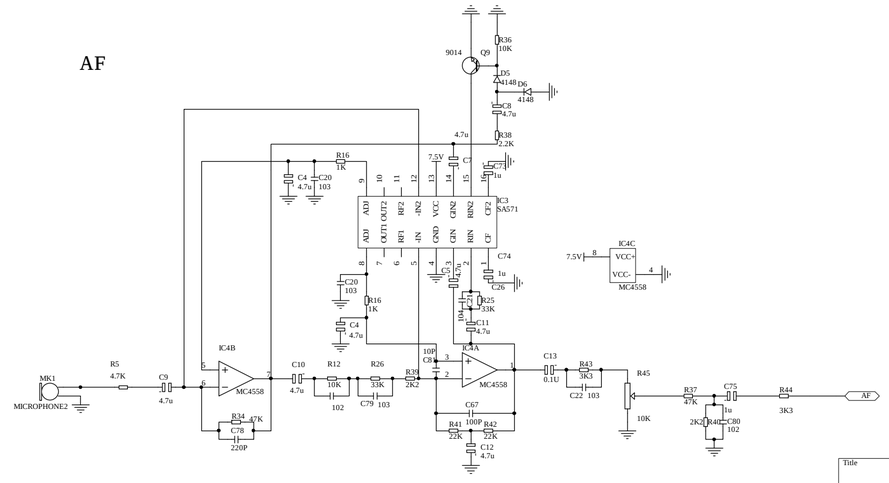

Title		
Size A3	Number	Revision
Date: 11-Nov-2008	Sheet of	
File: E:\pcb\PLL.DDB	Drawn By:	