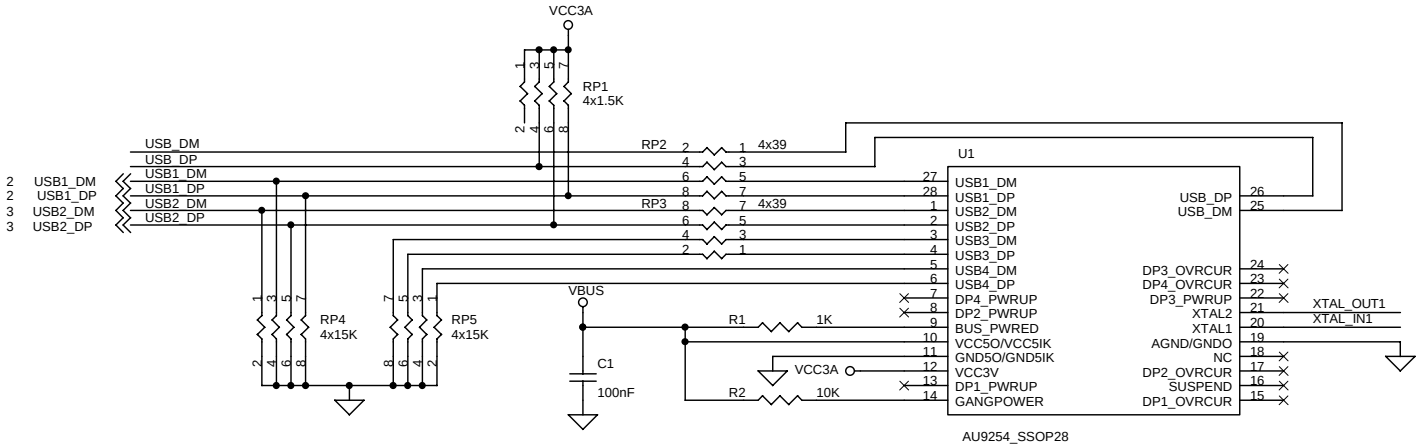

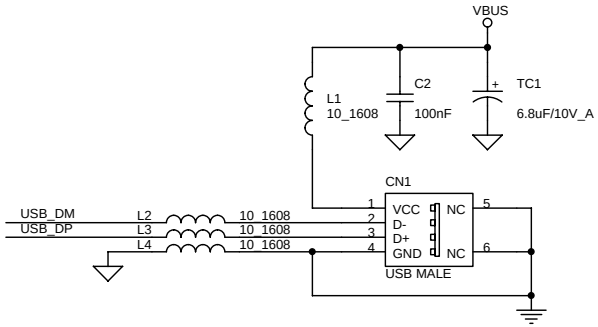

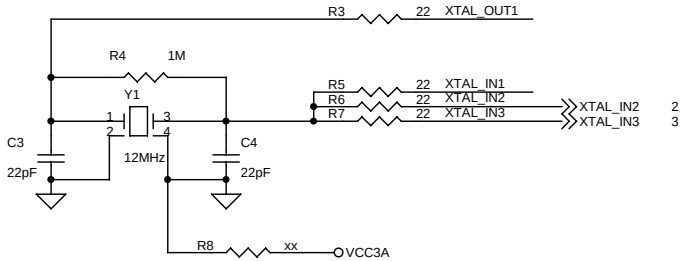

Title	**Call Stick (CMedia)**	
Size B	Document Number KEIMEN, Inc.	Rev 1.2
Date: Tuesday, October 25, 2005	Sheet 1 of 3	

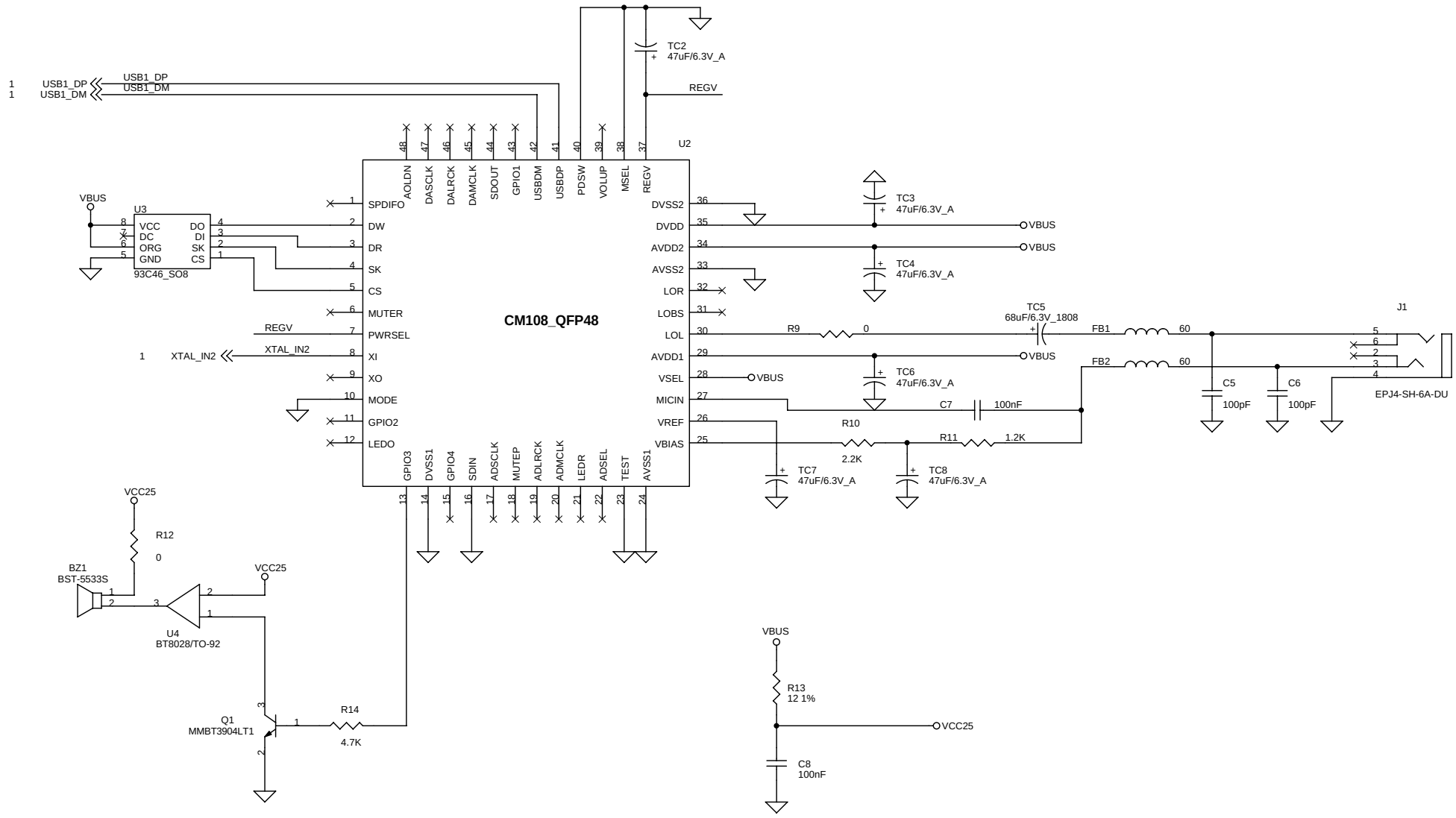

Title	**Call Stick (CMedia)**		
Size B	Document Number KEIMEN, Inc.		Rev 1.2
Date: Tuesday, October 25, 2005		Sheet 2 of 3	

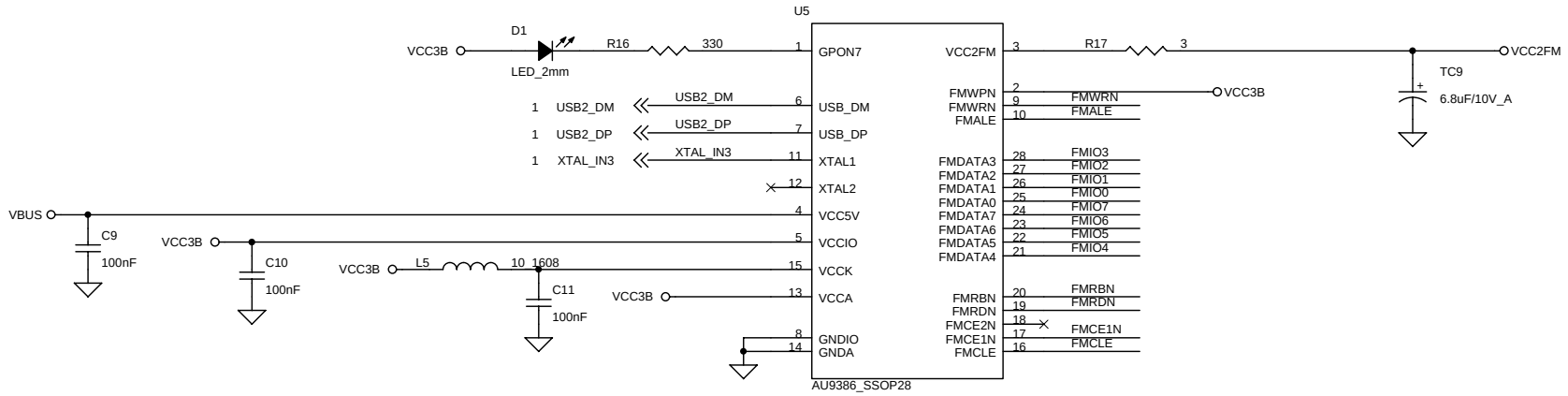

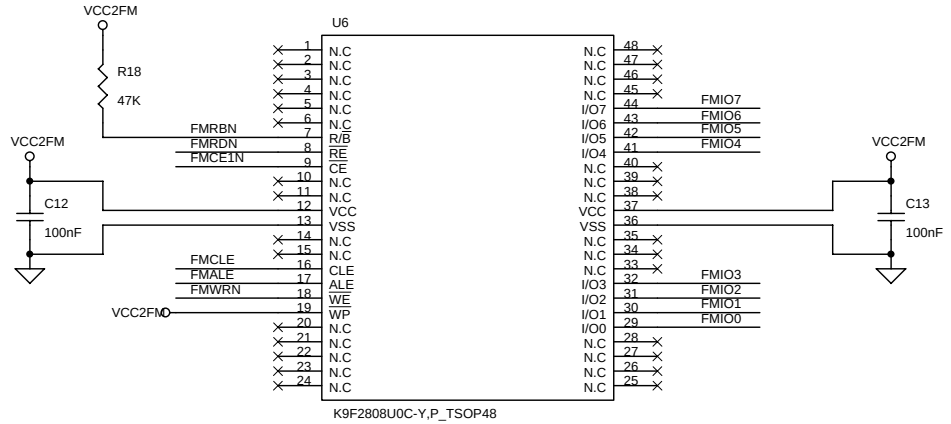

Title	**Call Stick (CMedia)**	
Size B	Document Number KEIMEN, Inc.	Rev 1.2
Date: Tuesday, October 25, 2005	Sheet 3 of 3	