Singing Machine
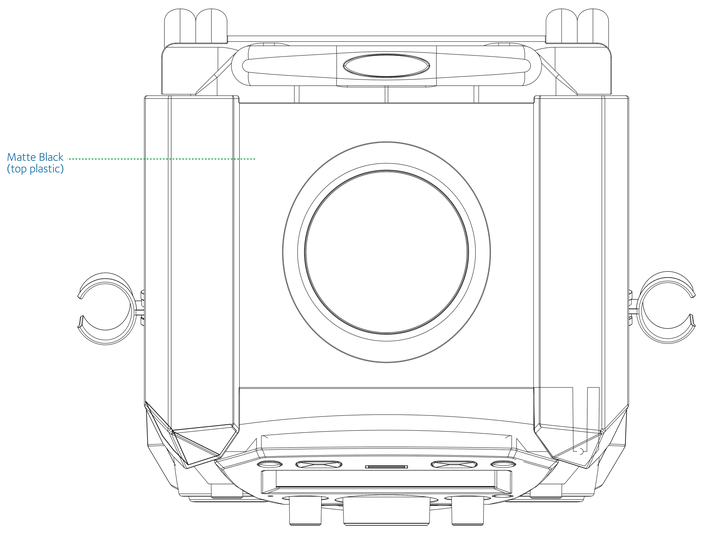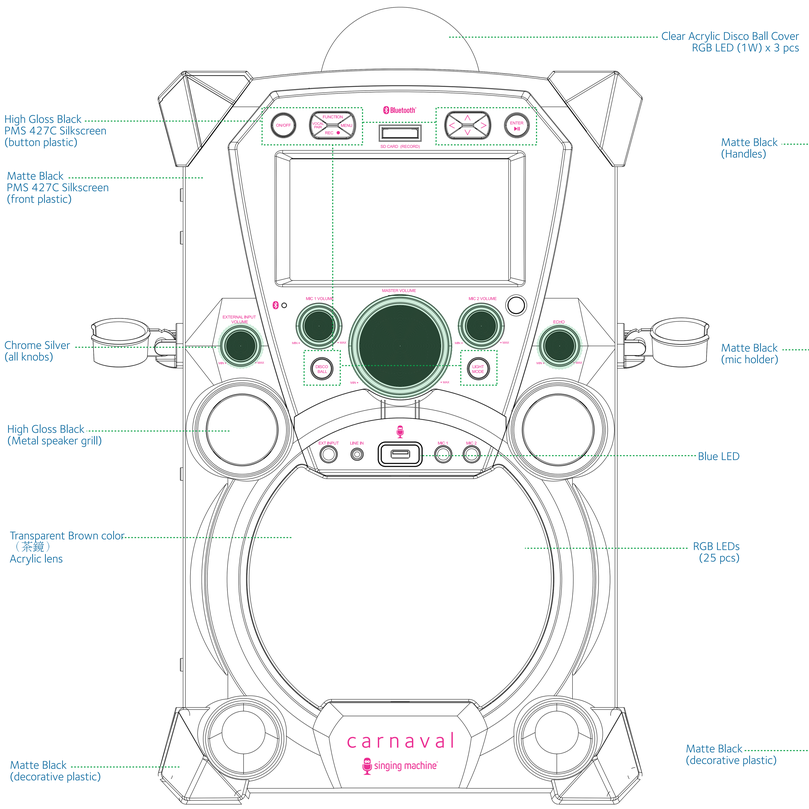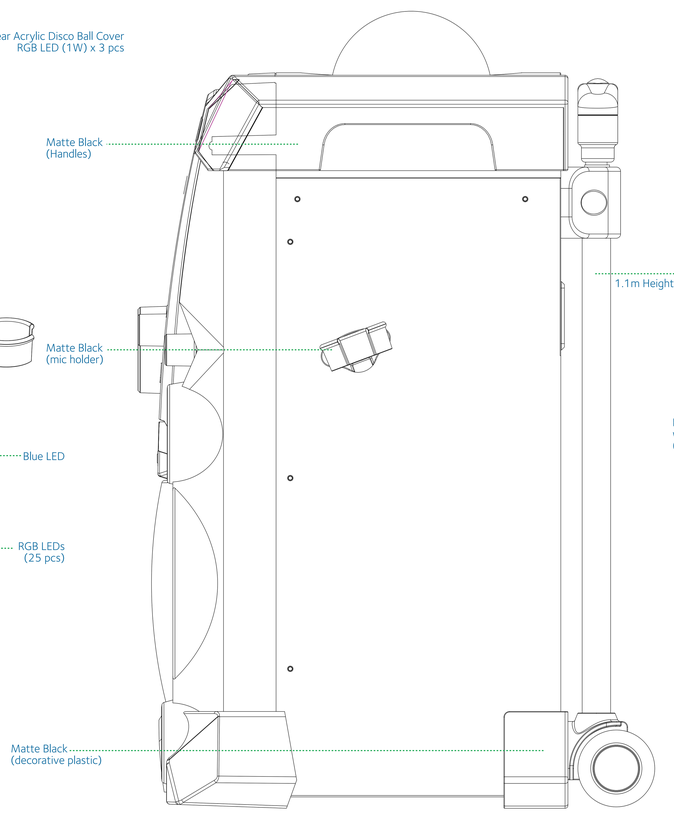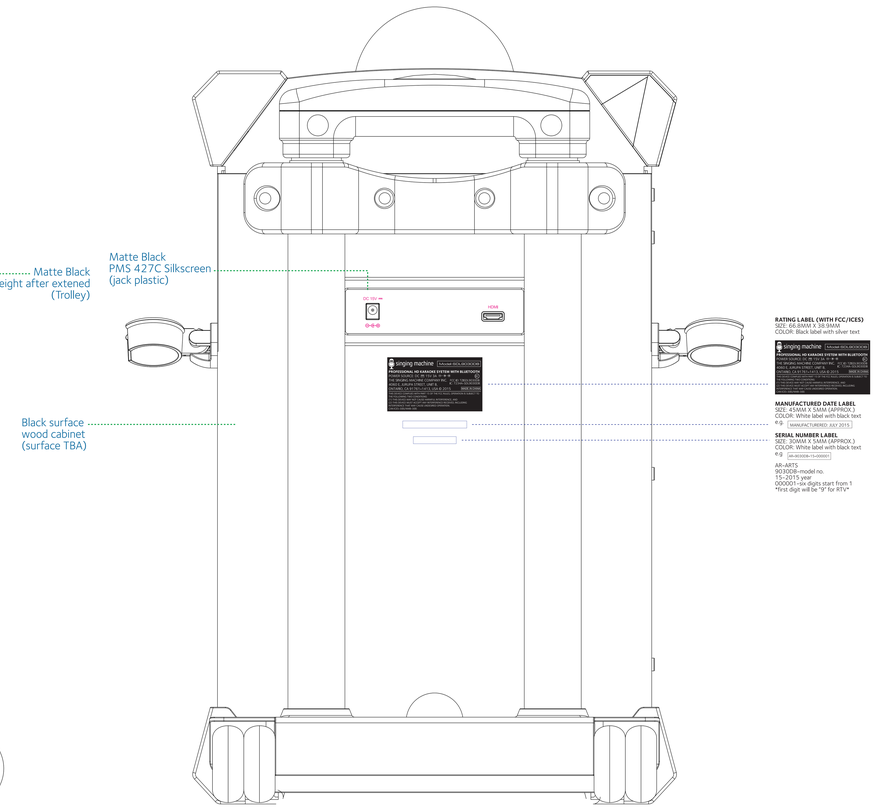
Model number: SDL9030DB
Version: US
Date: 13th AUGUST, 2015 (REV)