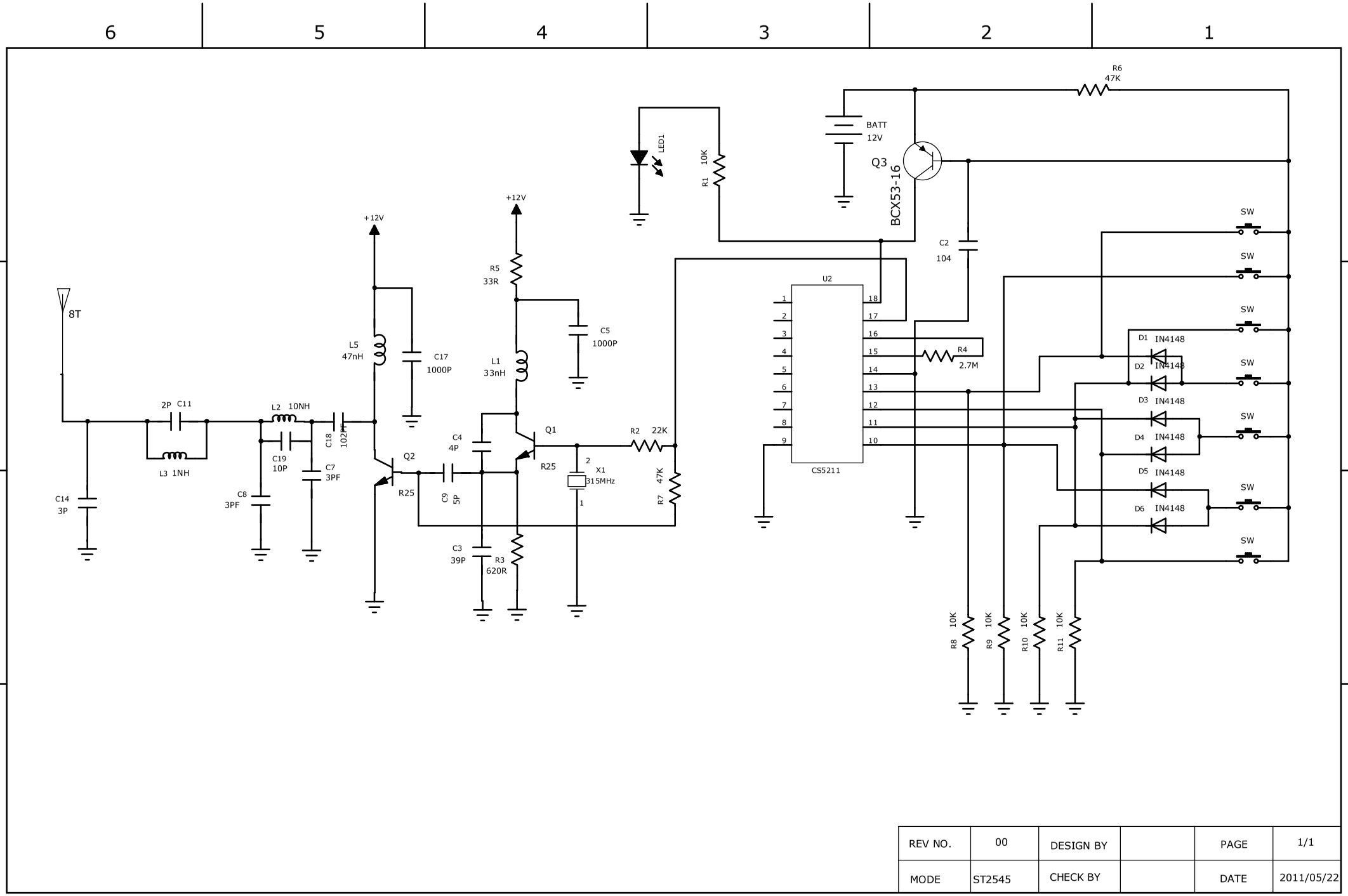

REV NO.	00	DESIGN BY		PAGE	1/1
MODE	ST2545	CHECK BY		DATE	2011/05/22