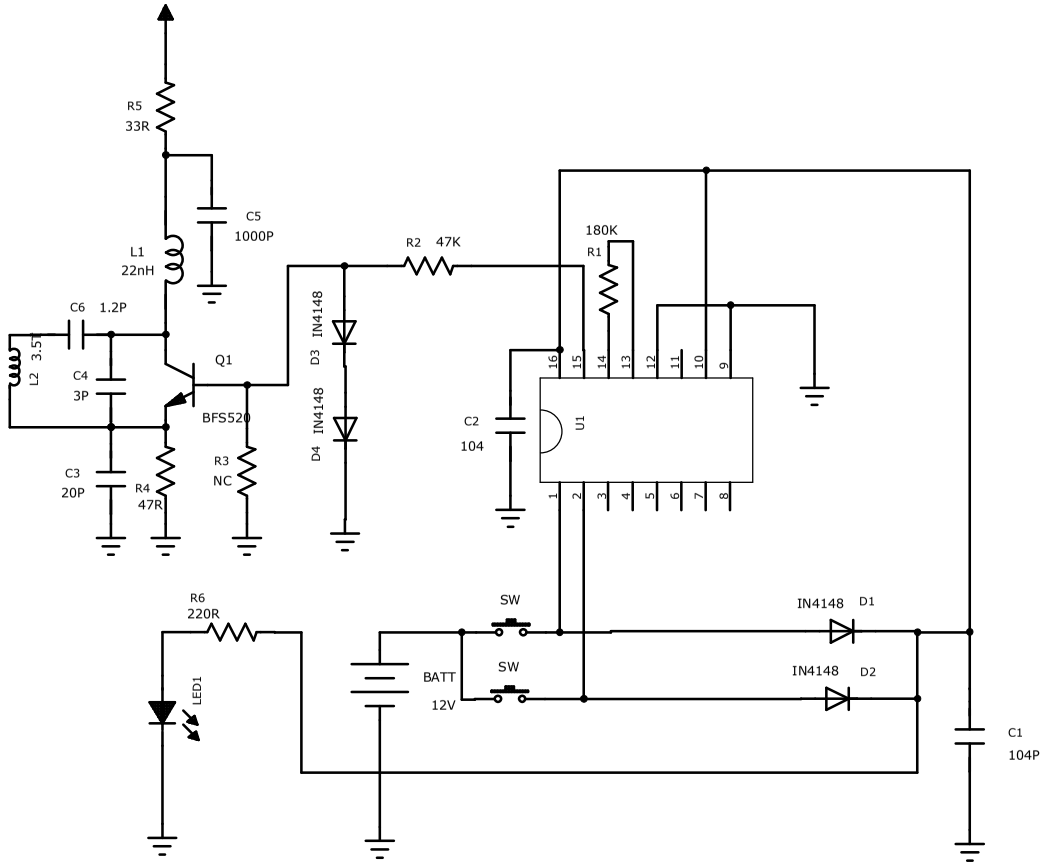

REV NO.	2	DESIGN BY	ZGXU	PAGE	
MODE	ST1801-433	CHECK BY		DATE	2009/2/13