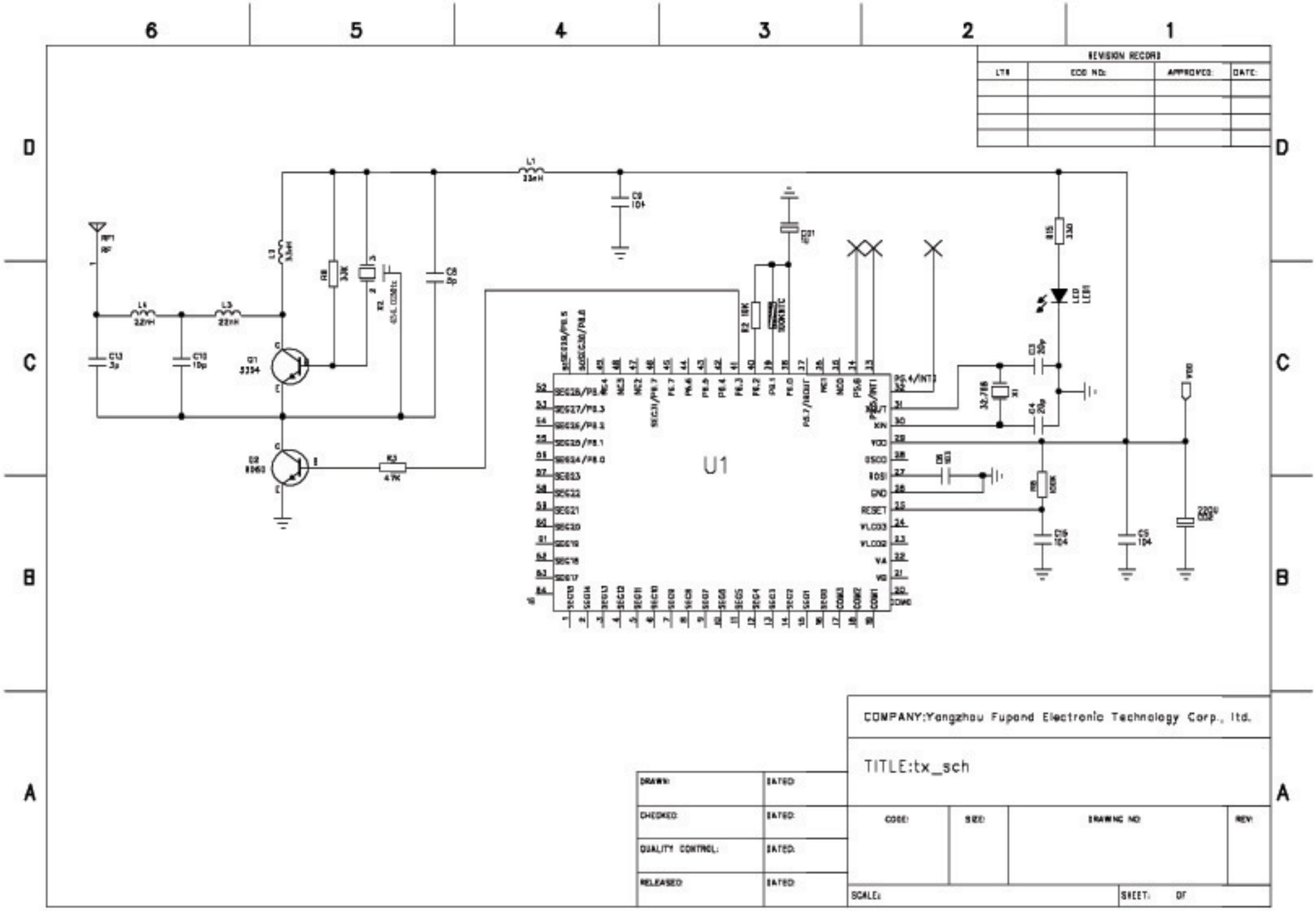

COMPANY:Yangzhou Fupond Electronic Technology Corp., ltd.

TITLE:tx_sch

DRAWN:	DATED:				
CHECKED:	DATED:	CODE:	SIZE:	DRAWING NO:	REV:
QUALITY CONTROL:	DATED:				
RELEASED:	DATED:	SCALE:		SHEET: OF	

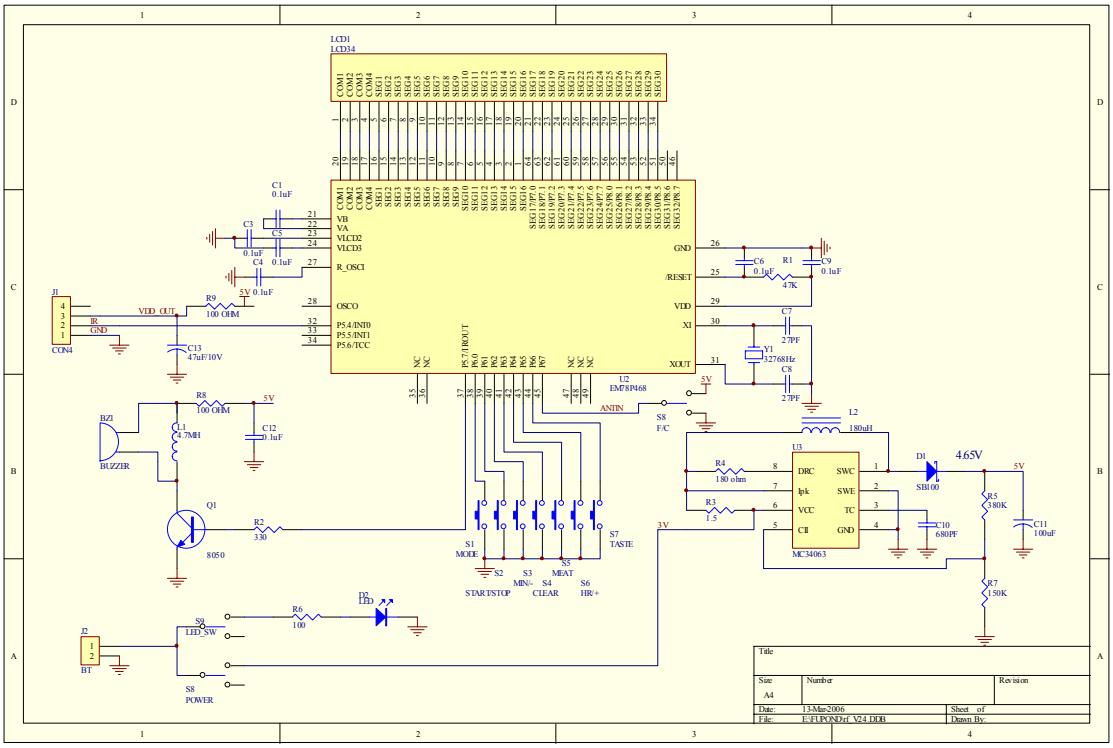
LCD1
LCD34
U2
EM78P468
U3
MC34063
J1
CON4
J2
BT
BZ1
BUZZER
Q1
8050
D1
SB100
D2
LED
S1
MODE
S2
STARTSTOP
S3
MIN/-
S4
CLEAR
S5
MEAT
S6
HR/+
S7
TASTE
S8
F/C
S8
LED_SW
S8
POWER
VDD_OUT
5V
3V
4.65V
Title
Size
A4
Number
Revision
Date:
13-Mar-2006
Sheet of
File:
E:\FUPOND\rf_V24.DDB
Drawn By: