User's Manual

The attachment is the user's manual for the specific Lenovo host PC device in this application that consists of the following two sections.

1. The regulatory notice concerning the FCC Part 2 /15B /15C and IC RSS-102/210, ICES-003 for the applying WLAN transmitter device (FCC ID: **TX2-RTL8188CE**, IC: **6317A-RTL8188CE**).

2. The electronic user's guidance referred to in the above regulatory notices, which are displayed on the LCD screen of the host PC device.

1. Regulatory notice for WLAN / Bluetooth transmitter devices

About this manual

This manual contains regulatory information for the following ThinkPad® products.

- ThinkPad X220 Tablet and X220i Tablet

Read first — regulatory information

Read this document before using your computer. This computer complies with the radio frequency and safety standards of any country or region in which it has been approved for wireless use. Install and use your computer according to the following instructions.

If your computer contains a wireless WAN adapter, be sure to also read *ThinkPad Regulatory Notice for the Wireless WAN Adapter*, included with your computer.

The latest Regulatory Notice has been uploaded on the Web site. To refer to it, go to http://www.lenovo.com/think/support, and then click **User Guides & Manuals**.

Veuillez lire le présent document avant d'utiliser votre ordinateur. Cet ordinateur est conforme aux normes de fréquence radio et de sécurité de tous les pays ou régions dans lesquels son utilisation sans fil a été homologuée. Installez et utilisez l'ordinateur en respectant les instructions qui suivent.

Si votre ordinateur contient une carte de réseau étendu (WAN) sans fil, veillez à lire également la consigne réglementaire *ThinkPad Regulatory Notice for the Wireless WAN Adapter*, fournie avec votre ordinateur.

La version la plus récente de la Notice relative à la réglementation a été chargée sur le site Web. Pour la consulter, accédez à http://www.lenovo.com/think/support, puis sur **User Guides & Manuals**.

USA — Federal Communications Commission (FCC)

I. Approved wireless devices

This section presents the FCC ID and model number of each wireless device.

i) User installable wireless LAN/WiMAX adapter

- FCC ID: TX2-RTL8188CE (Model: RTL8188CE)
- FCC ID: PD962205ANHU (Model: 62205ANHU)

- FCC ID: PD9633ANHU (Model: 633ANHMW)
- FCC ID: PD9112BNHU (Model: 112BNHMW)
- FCC ID: PD9622ANXHU (Model: 622ANXHMW)

Notes:

- The PCI Express Mini Card (Model: 622ANXHMW) incorporates two functions: LAN and WiMAX. These functions operate exclusively, and do not transmit radio frequencies simultaneously.
- PCI Express Mini Cards for a wireless LAN marketed in the USA and Canada do not support or function in the extended channels (12ch, 13ch).
- The adapter you can install depends on the model of your computer.

ii) Preinstalled integrated *Bluetooth* device

- FCC ID: QDS-BRCM1046 (Model: BCM92070MD_LENO)

II. User installable wireless LAN/WiMAX adapter

i) Use of the wireless LAN/WiMAX adapter

If no integrated PCI Express Mini Card has been preinstalled in your computer, you can install one, provided by Lenovo® as an option. Plug the wireless option adapter into the PCI Express Mini Card slot. For the installation procedure, see “Installing and replacing the PCI Express Mini Card for wireless LAN/WiMAX connection” in *User Guide*.

Attention: The computer contains an authentication mechanism. If you install an unauthorized PCI Express Mini Card that is not approved for use in your computer, the computer will not start, but only displays an error message and emits audible beeps.

ii) FCC ID location

There is no FCC ID for the PCI Express Mini Card shown on the enclosure of your computer. Instead you will find an indicator pointing to the location of the FCC ID on the bottom of your computer. The FCC ID is affixed on the approved adapter installed in the PCI Express Mini Card slot, and the FCC ID is visible prior to installation. For the location of the FCC ID indicator and the slot, see “Location of the FCC ID and IC Certification number label” in *User Guide*.

iii) FCC RF Exposure compliance

The total radiated energy from the Main, Auxiliary, and Third antennas connected to one of the PCI Express Mini Cards conforms to the FCC limit of the SAR (Specific Absorption Rate) requirement regarding 47 CFR Part 2 section 1093, when the computer was tested in either conventional notebook or tablet computer orientations.

The transmission antennas for the PCI Express Mini Card are located in the LCD cover. See “Location of the UltraConnect™ wireless antennas” in *User Guide*.

iv) Radio Frequency interference requirements

Each device has been tested and found to comply with the limits for a Class B digital device pursuant to FCC Part 15 Subpart B. Refer to “Electronic emission notices” on page 8 .

When you use a wireless LAN/WiMAX adapter in the 802.11 a/n transmission mode:

- Each device is restricted to indoor use due to its operation in the 5150 to 5250 MHz frequency range. FCC requires these products to be used indoors for the frequency range 5150 to 5250 MHz to reduce the potential for harmful interference to co-channel Mobile Satellite systems.
- High power radars are allocated as primary users of the 5250 to 5350 MHz and 5650 to 5850 MHz bands. These radar stations can cause interference with and/or damage this device.

III. Preinstalled integrated *Bluetooth* device

i) Use of the *Bluetooth* device

The *Bluetooth* device is preinstalled by Lenovo, and is not removable by you. If the device requires replacement during warranty it must be serviced by a Lenovo authorized servicer.

ii) FCC ID location

If your computer uses a *Bluetooth* device, the FCC ID for the *Bluetooth* device is affixed on the label at the bottom of your computer.

iii) FCC RF safety requirement

The radiated output power of the *Bluetooth* device is far below the FCC radio frequency exposure limits. Therefore, a 20 cm of separation between the *Bluetooth* antenna and human body is not required.

The *Bluetooth* device is located under the palm rest. See “About your computer” in *User Guide*.

iv) Radio Frequency interference requirements

The *Bluetooth* device has been tested and found to comply with the limits for both a Class B digital device regarding FCC Part 15 Subpart B and an intentional radiator regarding FCC Part 15 Subpart C; then it underwent the certification processes for both rules. Thus the FCC ID for the *Bluetooth* device includes both certifications of Part 15 Subpart B and C.

V. Digitizer function (for ThinkPad X220 Tablet and X220i Tablet)

The ThinkPad X220 Tablet and X220i Tablet computers employ a digitizer function which is able to sense the Digitizer Pen shipped associated with your computer. The digitizer emits extra low power radio frequency and complies with the FCC Part 15, Subpart C. The FCC ID: PU5-TP00019A is indicated on the label at the bottom side of your computer.

VI. Simultaneous use of RF transmitters

Your computer is approved for simultaneous use of one of the approved wireless LAN/WiMAX adapters, the approved wireless WAN adapter, and the approved *Bluetooth* device. For a list of those transmitters, refer to “I. Approved wireless devices” on page 1 and *ThinkPad Regulatory Notice for the Wireless WAN Adapter*.

Make sure of the following conditions when you use any other external RF option device:

1. When you use any other RF option device, you are requested to confirm that the device conforms to the RF Safety requirement and is approved to use for your computer.
2. You must follow the RF Safety instructions of the RF option device that are included in the user manual of the RF option device.
3. If the RF option device is prohibited to use in conjunction with another transmitters, you must turn off all other wireless features in your computer.

Canada — Industry Canada (IC)

IC Certification number

I. Approved wireless devices

This section presents the IC Certification and model number of each wireless device.

i) User installable wireless LAN adapter

- IC: 6317A-RTL8188CE (Model: RTL8188CE)
- IC: 1000M-62205ANHU (Model: 62205ANHU)
- IC: 1000M-633ANHU (Model: 633ANHMW)
- IC: 1000M-112BNHU (Model: 112BNHMW)

Notes:

- PCI Express Mini Cards for a wireless LAN marketed in the USA and Canada do not support or function in the extended channels (12ch, 13ch).
- The adapter you can install depends on the model of your computer.

ii) Preinstalled integrated *Bluetooth* device

- IC: 4324A-BRCM1046 (Model: BCM92070MD_LENO)

II. User installable wireless LAN adapter

There is no certification number of Industry Canada for the PCI Express Mini Card shown on the enclosure of your computer. Instead you will find an indicator pointing to the location of the IC Certification number on the bottom of your computer. The IC certification number is affixed on the approved adapter installed in the PCI Express Mini Card slot, and the IC Certification number is visible prior to installation. For the location of the IC Certification number indicator and the slot, see “Location of the FCC ID and IC Certification number label” in *User Guide*.

Attention: The computer contains an authentication mechanism. You can install or remove each wireless adapter by yourself. If you install an unauthorized wireless adapter that is not approved for use in the computer, the computer will not start, but only displays an error message and emits audible beeps.

III. Preinstalled integrated *Bluetooth* device

If your computer uses a *Bluetooth* device, the IC Certification number for the *Bluetooth* device is affixed on the label at the bottom of your computer. The *Bluetooth* device is preinstalled by Lenovo, and is not removable by you. If the device requires replacement during warranty it must be serviced by a Lenovo authorized servicer.

V. Digitizer function (for ThinkPad X220 Tablet and X220i Tablet)

The ThinkPad X220 Tablet and X220i Tablet computers employ a digitizer function which is able to sense the Digitizer Pen shipped associated with your computer. The digitizer emits extra low power radio frequency and complies with the standard (RSS-210). The IC certification number 4182A-TP00019A is indicated on the label at the bottom side of your computer.

VI. WiMAX features

The use of the WiMAX features is not permitted in Canada. Do not use the features. To do so would be a violation of Industry Canada regulations.

VII. Low power license-exempt radiocommunication devices (RSS-210)

Operation is subject to the following two conditions:

1. This device may not cause interference, and
2. this device must accept any interference, including interference that may cause undesired operation of the device.

The transmitter devices have been designed to operate with the antennas integrated in the computer, and having a maximum gain of within 3 dBi.

The maximum antenna gain permitted for devices in the 5250-5350 MHz, 5470-5725 MHz, and 5725-5825 MHz bands complies with the e.i.r.p. limit in section A9.2 of RSS-210.

When you use a wireless LAN adapter in the 802.11 a/n transmission mode:

- The devices for the band 5150–5250 MHz are only for indoor usage to reduce potential for harmful interference to co-channel Mobile Satellite systems.
- High power radars are allocated as primary users (meaning they have priority) of 5250–5350 MHz and 5650–5850 MHz and these radars could cause interference and/or damage to LELAN (Licence-Exempt Local Area Network) devices.

VIII. Exposure of humans to RF fields (RSS-102)

The computers employ low gain integral antennas that do not emit RF field in excess of Health Canada limits for the general population; consult Safety Code 6, obtainable from Health Canada's Web site at http://www.hc-sc.gc.ca/

The radiated energy from the antennas connected to the wireless adapters conforms to the IC limit of the RF exposure requirement regarding IC RSS-102, Issue 2 clause 4.1.

Numéro d'homologation IC

I. Périphériques sans fil homologués

Cette section présente le numéro d'homologation IC et le numéro de modèle de chaque périphérique sans fil.

i) Module sans fil installable par l'utilisateur

- IC: 6317A-RTL8188CE (Model: RTL8188CE)
- IC: 1000M-62205ANHU (Model: 62205ANHU)
- IC: 1000M-633ANHU (Model: 633ANHMW)
- IC: 1000M-112BNHU (Model: 112BNHMW)

Remarques:

- Les cartes de réseau local sans fil Express mini-PCI commercialisées aux Etats-Unis et au Canada ne prennent pas en charge les canaux étendus (12ch, 13ch) et ne fonctionnent donc pas sur de tels canaux.
- La carte que vous pouvez installer dépend du modèle de votre ordinateur.

ii) Émetteur *Bluetooth* intégré préinstallé

- IC: 4324A-BRCM1046 (Model: BCM92070MD_LENO)

II. Module sans fil installable par l'utilisateur

Le boîtier de votre ordinateur ne comporte pas de numéro d'homologation IC (Industry Canada) pour la carte mini-PCI Express; mais sous votre ordinateur, vous trouverez un indicateur pointant vers l'emplacement du numéro d'homologation IC. Pour connaître l'emplacement du numéro d'homologation IC, consultez la section correspondante dans *User Guide*. Le numéro d'homologation IC figure sur la carte homologuée installée dans le logement pour carte mini-PCI Express et est visible avant l'installation. Pour savoir où se trouve cet emplacement, consultez la section correspondante dans *User Guide*.

Attention: L'ordinateur contient un mécanisme d'authentification. Vous pouvez installer ou désinstaller tout dispositif sans fil. Si vous installez une carte sans fil qui n'est pas homologuée dans votre ordinateur, l'ordinateur ne démarrera pas mais affichera un message d'erreur et générera des bips sonores.

III. Émetteur *Bluetooth* intégré préinstallé

Si votre ordinateur utilise un émetteur *Bluetooth*, le numéro d'homologation IC de cet émetteur *Bluetooth* figure sur une étiquette collée sous l'ordinateur. L'émetteur *Bluetooth* est préinstallé par Lenovo et ne peut pas être retiré par l'utilisateur. S'il doit être remplacé pendant la période de garantie, l'opération doit être effectuée par un prestataire de services agréé par Lenovo.

V. Fonction de numérisation (pour ThinkPad X220/X220i Tablet convertible)

Les ordinateurs ThinkPad X220/X220i Tablet convertible utilisent une fonction de numérisation capable de détecter le stylo numériseur de la graphique qui est associé à votre ordinateur. Le numériseur émet une fréquence radio extrêmement basse et il est conforme à la norme CNR-210. Le numéro de certification IC: 4182A-TP00019A figure sur l'étiquette apposée au bas de votre ordinateur.

VI. Fonctions WiMAX

L'utilisation de fonctions WiMAX n'est pas autorisée au Canada. Veuillez ne pas utiliser car ce serait une infraction aux lois d'Industrie Canada.

VII. Remarque relative aux appareils de communication radio de faible puissance sans licence (CNR-210)

Le fonctionnement de ce type d'appareil est soumis aux deux conditions suivantes:

1. Cet appareil ne doit pas perturber les communications radio, et
2. cet appareil doit supporter toute perturbation, y compris les perturbations qui pourraient provoquer son dysfonctionnement.

Les périphériques d'émission sont conçus pour fonctionner avec des antennes intégrées à l'ordinateur et ayant un gain maximal de moins de 3 dBi.

Le gain d'antenne maximal pour les périphériques dans les bandes de fréquence 5250-5350 MHz, 5470-5725 MHz, et 5725-5825 MHz est conforme à la limite p.i.r.e énoncée dans la section A9.2 de la CNR-210.

Lorsque vous utilisez la carte pour réseau local sans fil en mode de transmission 802.11 a/n:

- Tout appareil destiné à la bande 5150-5250 MHz devra être exclusivement utilisé en intérieur afin de réduire les risques de perturbations électromagnétiques gênantes sur les systèmes de satellite mobile dans un même canal.
- Les radars à forte puissance sont désignés comme les utilisateurs principaux (c'est-à-dire qu'ils sont prioritaires) des bandes 5250-5350 MHz et 5650-5850 MHz. Ils peuvent provoquer des perturbations électromagnétiques sur les appareils de type LELAN (réseau de communication local sans licence) ou les endommager.

VIII. Exposition des êtres humains aux champs radioélectriques (RF) (CNR-102)

L'ordinateur utilise des antennes intégrales à faible gain qui n'émettent pas un champ électromagnétique supérieur aux normes imposées par le Ministére de la santé canadien pour la population. Consultez le Safety Code 6 sur le site Web du Ministére de la santé canadien à l'adresse http://www.hc-sc.gc.ca/

L'énergie émise par les antennes reliées aux adaptateurs sans fil respecte la limite d'exposition aux radiofréquences telle que définie par Industrie Canada dans la clause 4.1 du document CNR-102.

Electronic emission notices

Federal Communications Commission (FCC) Declaration of Conformity

- Model: RTL8188CE
- ThinkPad X220 Tablet and X220i Tablet (machine type: 4294, 4296, 4297, 4298, 4299, 4300, and 4301)

Note: The wireless LAN/WiMAX adapters (Models: 633ANHMW, 62205ANHMW, 112BNHMW, and 622ANXHMW) and the *Bluetooth* device (Model: BCM92070MD_LENO) underwent certification process for the FCC Part 15 Subpart B compliance under each respective FCC ID number.

This equipment has been tested and found to comply with the limits for a Class B digital device, pursuant to Part 15 of the FCC Rules. These limits are designed to provide reasonable protection against harmful interference in a residential installation. This equipment generates, uses, and can radiate radio frequency energy and, if not installed and used in accordance with the instructions, may cause harmful interference to radio communications. However, there is no guarantee that interference will not occur in a particular installation. If this equipment does cause harmful interference to radio or television reception, which can be determined by turning the equipment off and on, the user is encouraged to try to correct the interference by one or more of the following measures:

- Reorient or relocate the receiving antenna.
- Increase the separation between the equipment and receiver.
- Connect the equipment into an outlet on a circuit different from that to which the receiver is connected.
- Consult an authorized dealer or service representative for help.

Lenovo is not responsible for any radio or television interference caused by unauthorized changes or modifications to this equipment. Unauthorized changes or modifications could void the user's authority to operate the equipment.

This device complies with Part 15 of the FCC Rules. Operation is subject to the following two conditions: (1) this device may not cause harmful interference, and (2) this device must accept any interference received, including interference that may cause undesired operation.

Responsible Party:

Lenovo (United States) Incorporated
1009 Think Place-Building One
Morrisville, NC 27560
Telephone: 1-919-294-5900

Industry Canada Class B Emission Compliance Statement

This Class B digital apparatus complies with Canadian ICES-003.

Avis de conformité à la réglementation d'Industrie Canada

Cet appareil numérique de la classe B est conforme à la norme NMB-003 du Canada.

Telecommunication notices

Federal Communications Commission (FCC) and Telephone Company Requirements (Part 68 of the FCC Rules)

1. The Telephone Consumer Protection Act of 1991 makes it unlawful for any person to use a computer or other electronic device to send any message via a telephone fax machine unless such message clearly contains in a margin at the top or bottom of each transmitted page or on the first page of the transmission, the date and time it is sent, and an identification of the business or other entity, or other individual sending the message and the telephone number of the sending machine or such business, other entity, or individual. In order to program this information into your computer, you should be sure to follow the installation instructions for your fax software package.
2. This equipment complies with Part 68 of the FCC rules and the requirements adopted by the ACTA. On this equipment is a label that contains, among other information, a product identifier in the format US:AAAEQ##TXXXX. If requested, this number must be provided to the telephone company.
3. The REN is used to determine the number of devices that may be connected to a telephone line. Excessive RENs on a telephone line may result in the devices not ringing in response to an incoming call. In most but not all areas, the sum of RENs should not exceed five (5.0). To be certain of the number of devices that may be connected to a line, as determined by the total RENs, contact the local telephone company. The REN for this product is part of the product identifier that has the format US:AAAEQ##TXXXX. The digits represented by ## are the REN without a decimal point (e.g., 03 is a REN of 0.3).
4. If the built-in modem causes harm to the telephone network, the telephone company may discontinue your service temporarily. If possible, they will notify you in advance. But, if advance notice isn't practical, you will be notified as soon as possible. You will be advised of your right to file a complaint with the FCC.
5. Your telephone company may make changes in its facilities, equipment, operations, or procedures that could affect the proper operation of your equipment. If they do, you will be given advance notice so as to give you an opportunity to maintain uninterrupted service.
6. No customer repairs are possible to the modem. If you experience trouble with this built-in modem, contact your Lenovo Authorized Seller, or the Customer Support Center. For the most current phone numbers, go to http://www.lenovo.com/think/support and click Support phone list. The telephone company may ask you to disconnect this equipment from the network until the problem has been corrected, or until you are sure the equipment is not malfunctioning.
7. The modem may not be used on coin service provided by the telephone company. Connection to party lines is subject to state tariffs. Contact your state public utility commission or corporation commission for information.

8. When ordering network interface (NI) service from the Local Exchange Carrier, specify service arrangement USOC RJ11C.
9. A plug and jack used to connect this equipment to the premises wiring and telephone network must comply with the applicable FCC Part 68 rules and requirements adopted by the ACTA. A compliant telephone cord and modular plug is provided with this product. It is designed to be connected to a compatible modular jack that is also compliant. See installation instructions for details.
10. If your home has specially wired alarm equipment connected to the telephone line, ensure the installation of this Data/Fax Modem does not disable your alarm equipment. If you have questions about what will disable alarm equipment, consult your telephone company or a qualified installer.

Industry Canada requirements

Notice: This equipment meets the applicable Industry Canada Terminal Equipment Technical Specifications. This is confirmed by the registration number. The abbreviation, IC, before the registration number signifies that registration was performed based on a Declaration of Conformity indicating that Industry Canada technical specifications were met. It does not imply that Industry Canada approved the equipment.

Before installing this equipment, users should ensure that it is permissible to be connected to the facilities of the local telecommunications company. The equipment must also be installed using an acceptable method of communication. In some cases, the company's inside wiring associated with a single line individual service may be extended by means of a certified connector assembly (telephone extension cord). The customer should be aware that compliance with the above conditions may not prevent degradation of service in some situations.

Repairs to certified equipment should be made by an authorized Canadian maintenance facility designated by the supplier. Any repairs of alterations made by the user to this equipment, or equipment malfunctions, may give the telecommunications company cause to request the user to disconnect the equipment.

Users should ensure for their own protection that the electrical ground connections of the power utility, telephone lines and internal metallic water pipe system, if present, are connected together. This precaution may be particularly important in rural areas.

Caution: Users should not attempt to make such connections themselves, but should contact the appropriate electric inspection authority, or electrician, as appropriate.

The Ringer Equivalence Number (REN) for the terminal equipment RD02-D450 or RD02-D330 is 0.1. The REN assigned to each terminal equipment provides an indication of the maximum number of terminals allowed to be connected to a telephone interface. The termination on an interface may consist of any

combination of devices subject only to the requirement that the sum of the Ringer Equivalence Numbers of all the devices does not exceed five.

Avis: Le présent matériel est conforme aux spécifications techniques d'Industrie Canada applicables au matériel terminal. Cette conformité est confirmée par le numéro d'enregistrement. Le sigle IC, placé devant le numéro d'enregistrement, signifie que l'enregistrement s'est effectué conformément à une déclaration de conformité et indique que les spécifications techniques d'Industrie Canada ont été respectées. Il n'implique pas qu'Industrie Canada a approuvé le matériel.

Avant d'installer ce matériel, l'utilisateur doit s'assurer qu'il est permis de le raccorder aux installations de l'entreprise locale de télécommunication. Le matériel doit également être installé en suivant une méthode acceptée de raccordement. Dans certains cas, les fils intérieurs de l'entreprise utilisés pour un service individuel à ligne unique peuvent être prolongés au moyen d'un dispositif homologué de raccordement (cordon prolongateur téléphonique interne). L'abonné ne doit pas oublier qu'il est possible que la conformité aux conditions énoncées ci-dessus n'empechent pas la dégradation du service dans certaines situations. Actuellement, les entreprises de télécommunication ne permettent pas que l'on raccorde leur matériel à des jacks d'abonné, sauf dans les cas précis prévus par les tarifs paticuliers de ces entreprises.

Les réparations de matériel homologué doivent être effectuées par un centre d'entretien canadien autorisé désigné par le fournisseur. La compagnie de télécommunications peut demander à l'utilisateur de débrancher un appareil à la suite de réparations ou de modifications effectuées par l'utilisateur ou à cause de mauvais fonctionnement.

Pour sa propre protection, l'utilisateur doit s'assurer que tous les fils de mise à la terre de la source d'énergie électrique, des lignes téléphoniques et des canalisations d'eau métalliques, s'il y en a, sont raccordés ensemble. Cette précaution est particulièrement importante dans les régions rurales.

Avertissement: L'utilisateur ne doit pas tenter de faire ces raccordements lui-même; il doit avoir recours à un service d'inspection des installations électriques, ou à électricien, selon le cas.

L'indice d'équivalence de la sonnerie (IES) du présent matériel RD02-D450 ou RD02-D330 este de 0.1. L'IES assigné à chaque dispositif terminal indique le nombre maximal de terminaux qui peuvent être raccordés à une interface téléphonique. La terminaison d'une interface peut consister en une combinaison quelconque de dispositifs, à la seule condition que la somme d'indices d'équivalence de la sonnerie de tous les dispositifs n'excède pas 5.

Trademarks

The following terms are trademarks of Lenovo in the United States, other countries, or both:

Lenovo
ThinkPad
UltraConnect

Other company, product, and service names may be trademarks or service marks of others.

© Copyright Lenovo 2010.

LENOVO products, data, computer software, and services have been developed exclusively at private expense and are sold to governmental entities as commercial iterms as defined by 48 C.F.R.2.101 with limited and restricted rights to use, reproduction and disclosure.

LIMITED AND RESTRICTED RIGHTS NOTICE: If products, data, computer software, or services are delivered pursuant a General Services Administration “GSA” contract, use, reproduction, or disclosure is subject to restrictions set forth in Contract No. GS-35F-05925.

Printed in China

(1P) P/N: 0A60004

2. The electronic user’s guidance

ThinkPad

User Guide

ThinkPad X220, X220i, X220 Tablet, and X220i Tablet

Notes: Before using this information and the product it supports, be sure to read the following:

- *Safety and Warranty Guide*
- *Regulatory Notice*
- "Important safety information" on page vi
- Appendix C "Notices" on page 251

The *Safety and Warranty Guide* and the *Regulatory Notice* have been uploaded on the Web site. To refer to them, go to http://www.lenovo.com/support, and then click **User Guides & Manuals**.

First Edition (April 2011)

© Copyright Lenovo 2011.

LENOVO products, data, computer software, and services have been developed exclusively at private expense and are sold to governmental entities as commercial items as defined by 48 C.F.R. 2.101 with limited and restricted rights to use, reproduction and disclosure.

LIMITED AND RESTRICTED RIGHTS NOTICE: If products, data, computer software, or services are delivered pursuant a General Services Administration "GSA" contract, use, reproduction, or disclosure is subject to restrictions set forth in Contract No. GS-35F-05925.

Contents

Read this first v

Important safety information vi

Conditions that require immediate action . . vii

Safety guidelines vii

Chapter 1. Product Overview 1

Locating computer controls, connectors, and indicators. 1

Front view. 1

Right-side view. 8

Left-side view 12

Bottom view 15

Rear view 17

Status indicators 18

Locating important product information 23

Machine type and model label. 23

FCC ID and IC Certification number label . . 24

Certificate of Authenticity label 26

Features 28

ThinkPad X220 and X220i features 28

ThinkPad X220 Tablet and X220i Tablet features 29

Specifications 30

ThinkPad X220 and X220i specifications. . . 30

ThinkPad X220 Tabet and X220i Tablet specifications 31

Operating environment 32

ThinkVantage Technologies and software 32

Accessing applications in Windows 7 33

Access Connections 35

Active Protection System. 35

Client Security Solution 35

Fingerprint Software. 35

Lenovo ThinkVantage Tools 36

Lenovo ThinkVantage Toolbox. 36

Message Center Plus 36

Password Manager 36

Power Manager 37

Product Recovery 37

Presentation Director 37

Rescue and Recovery 37

System Update 37

ThinkVantage GPS 38

Lenovo SimpleTap 38

Lenovo ThinkVantage Tablet Shortcut Menu . 38

Chapter 2. Using your computer . . . 39

Register your computer 39

Frequently asked questions 39

Tablet mode. 41

Using the tablet mode 41

Using the Tablet Digitizer Pen 43

Using the touch panel 45

Using the Tablet buttons 45

Using the Tablet Shortcut Menu 46

Special keys and buttons 46

ThinkVantage button 47

Numeric keypad 47

Function key combinations 49

Volume and mute buttons 52

Windows key and Application key 53

Using the UltraNav pointing device. 54

Using the TrackPoint pointing device 54

Using the touch pad. 56

Behavior of the UltraNav and an external mouse 57

Adding the UltraNav icon to the system tray . 57

Power management 58

Checking battery status 58

Using the ac power adapter. 58

Charging the battery 59

Maximizing battery life 59

Managing your battery power 59

Power-saving modes 59

Handling the battery. 61

Connecting to the network 62

Ethernet connections 62

Wireless connections 62

Using a projector or external display 70

Changing display settings 70

Connecting a projector or external display . . 71

Setting up a presentation. 75

Using dual displays 76

Using audio features 77

Using an integrated camera 78

Using the ThinkLight feature 79

Using the media card reader 79

Inserting an ExpressCard, a flash media card, or a smart card. 80

Removing an ExpressCard, a flash media card, or a smart card 81

Chapter 3. You and your computer. . 83

Accessibility and comfort 83

© Copyright Lenovo 2011

Ergonomic information 83
Adjusting your computer to fit you 84
Accessibility information 85
FullScreen Magnifier function 85
Traveling with your computer 86
Travel tips 86
Travel accessories 86

Chapter 4. Security 89
Attaching a mechanical lock 89
Using passwords 89
Passwords and sleep (standby) mode 90
Typing passwords 90
Power-on password 90
Hard disk passwords 91
Supervisor password 93
Hard disk security 95
Setting the security chip 96
Using a fingerprint reader 97
Using a fingerprint reader in ThinkPad X220 and X220i 97
Using a fingerprint reader in ThinkPad X220 Table and X220i Tablet 100
Notice on deleting data from your hard disk drive or solid state drive 105
Using and understanding firewalls 106
Protecting data against viruses 106

Chapter 5. Recovery overview . . . 107
Creating and using recovery media 107
Creating recovery media 108
Using recovery media 108
Performing backup and recovery operations . . . 109
Performing a backup operation 109
Performing a recovery operation 109
Using the Rescue and Recovery workspace . . . 110
Creating and using a rescue medium 111
Creating a rescue medium 111
Using a rescue medium 111
Reinstalling preinstalled applications and device drivers 112
Solving recovery problems 113

Chapter 6. Replacing devices . . . 115
Static electricity prevention 115
Replacing the battery 116
Replacing the keyboard 118
Replacing the palm rest 122
Replacing the hard disk drive 125
Replacing the solid state drive 128
Installing and replacing the PCI Express Mini Card for wireless LAN/WiMAX connection 131
Installing and replacing the PCI Express Mini Card for wireless WAN connection 137
Installing and replacing the mSATA solid state drive 141
Replacing memory 143
Replacing the SIM card 146

Chapter 7. Enhancing your computer 149
Finding ThinkPad options 149
ThinkPad X220 UltraBase 149
ThinkPad X220 Ultrabase top view 150
ThinkPad X220 Ultrabase bottom view . . . 151
Attaching a ThinkPad X220 Ultrabase 151
Detaching a ThinkPad X220 Ultrabase . . . 153
Security feature 155
ThinkPad Battery 19+ 156
Top view 156
Bottom view 156
Attaching a ThinkPad Battery 19+ 157
Detaching a ThinkPad Battery 19+ 157
Charging a ThinkPad Battery 19+ 158
ThinkPad Port Replicator Series 3, ThinkPad Mini Dock Series 3, and ThinkPad Mini Dock Plus Series 3 159
Front view 160
Rear view 163
Attaching a ThinkPad Port Replicator Series 3, ThinkPad Mini Dock Series 3, or ThinkPad Mini Dock Plus Series 3 166
Detaching a ThinkPad Port Replicator Series 3, ThinkPad Mini Dock Series 3, and ThinkPad Mini Dock Plus Series 3 168
Security feature 170
Using the system lock key 172

Chapter 8. Advanced configuration 173
Installing a new operating system 173
Before you begin 173
Installing Windows 7 174
Installing Windows Vista 175
Installing Windows XP 176
Installing device drivers 178
Installing the driver for the 4-in-1 Media Card Reader 178
Installing the driver for USB 3.0 178
Installing ThinkPad Monitor File for Windows 2000/XP/Vista/7 179
Installing Intel Chipset Support for Windows 2000/XP/Vista/7 180
Installing drivers and software 181
ThinkPad Setup 181

Config menu 182
Date and time menu 182
Security menu 183
Startup menu 184
Restart menu 185
ThinkPad Setup items 185
Updating your system UEFI BIOS 197
Using system management 197
System management 198
Setting management features 199

Chapter 9. Preventing problems . . 201
General tips for preventing problems 201
Making sure device drivers are current 202
Getting the latest drivers from the Web site . . 202
Getting the latest drivers using System Update 202
Taking care of your computer 203
Cleaning the cover of your computer 205

Chapter 10. Troubleshooting computer problems 207
Diagnosing problems 207
Using Lenovo ThinkVantage Toolbox 207
Using Lenovo In-ROM Diagnostics 207
Troubleshooting 208
Computer stops responding 208
Spills on the keyboard 209
Error messages 209
Errors without messages 211
Beep errors 212
Memory problems 212
Modem and networking 213
Keyboard and other pointing devices 217
Display and multimedia devices 219
Fingerprint reader problems 228
Battery and power 229
Drives and other storage devices 232
Software problems 233
Ports and connectors 233
Universal Serial Bus problems 233
A docking station or port replicator problem 234

Chapter 11. Getting support 235
Before you contact Lenovo 235
Register your computer 235
Download system updates 235
Record information 235
Getting help and service 236
Using diagnostic programs 236
Lenovo support Web site 236
Calling Lenovo 236
Purchasing additional services 241

Appendix A. Regulatory information 243
Wireless related information 243
Location of the UltraConnect™ wireless antennas 244
Locating wireless regulatory notices 245
Export classification notice 246
Electronic emission notices 246
Federal Communications Commission Declaration of Conformity 246
Industry Canada Class B emission compliance statement 246
European Union - Compliance to the Electromagnetic Compatibility Directive . . . 247
German Class B compliance statement . . . 247
Korea Class B compliance statement 248
Japan VCCI Class B compliance statement . . 248
Japan compliance statement for products which connect to the power mains with rated current less than or equal to 20 A per phase 248
Lenovo product service information for Taiwan 248
Pointer to the printed pub for additional regulatory information 248

Appendix B. WEEE and recycling statements 249
EU WEEE statements 249
Japan recycling statements 249

Appendix C. Notices 251
Trademarks 252

© Copyright Lenovo 2011

Read this first

Be sure to follow the important tips given here to continue to get the most use and enjoyment out of your computer. Failure to do so might lead to discomfort or injury, or cause your computer to fail.

When your computer is turned on or the battery is charging, the base, the palm rest, and some other parts may become hot. The temperature they reach depends on the amount of system activity and the level of charge in the battery.

Extended contact with your body, even through clothing, could cause discomfort or even a skin burn.

- Avoid keeping your hands, your lap, or any other part of your body in contact with a hot section of the computer for any extended time.
- Periodically take hands from using the keyboard by lifting your hands from the palm rest.

Protect yourself from the heat generated by the ac power adapter.

When the ac power adapter is connected to an electrical outlet and your computer, it generates heat.

Extended contact with your body, even through clothing, may cause a skin burn.

- To avoid spills and the danger of electrical shock, keep liquids away from your computer.
- Never use it to warm your body.

Prevent your computer from getting wet.

- To avoid spills and the danger of electrical shock, keep liquids away from your computer.

Protect the cables from being damaged.

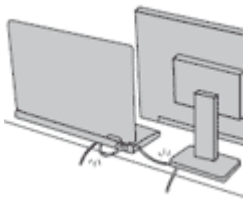

Applying strong force to cables may damage or break them.

- Route communication lines, or the cables of an ac power adapter, a mouse, a keyboard, a printer, or any other electronic device, so that they cannot be walked on, tripped over, pinched by your computer or other objects, or in any way subjected to treatment that could interfere with the operation of your computer.

© Copyright Lenovo 2011

Protect your computer and data when moving it.

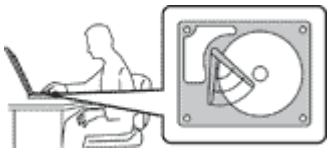

Before moving a computer equipped with a hard disk drive, do one of the following, and make sure that the power switch is off or is blinking:

- Turn it off.
- Press Fn+F4 to put it in sleep (standby) mode.
- Press Fn+F12 to put it in hibernation mode.

This will help to prevent damage to the computer, and possible loss of data.

Handle your computer gently.

- Do not drop, bump, scratch, twist, hit, vibrate, push, or place heavy objects on your computer, display, or external devices.

Carry your computer carefully.

- Use a quality carrying case that provides adequate cushioning and protection.
- Do not pack your computer in a tightly packed suitcase or bag.
- Before putting your computer in a carrying case, make sure that it is off, in sleep (standby) mode (Fn+F4), or in hibernation mode (Fn+F12). Do not put a computer in a carrying case while it is turned on.

Important safety information

Note: Read important safety information first.

This information can help you safely use your notebook personal computer. Follow and retain all information included with your computer. The information in this document does not alter the terms of your purchase agreement or the Lenovo® Limited Warranty. For more information, see “Warranty Information” in the *Safety and Warranty Guide* that comes with your computer.

Customer safety is important. Our products are developed to be safe and effective. However, personal computers are electronic devices. Power cords, power adapters, and other features can create potential safety risks that can result in physical injury or property damage, especially if misused. To reduce these risks, follow the instructions included with your product, observe all warnings on the product and in the operating instructions, and review the information included in this document carefully. By carefully following the information contained in this document and provided with your product, you can help protect yourself from hazards and create a safer computer work environment.

Note: This information includes references to power adapters and batteries. In addition to notebook computers, some products (such as speakers and monitors) ship with external power adapters. If you have such a product, this information applies to your product. In addition, computer products contain a coin-sized internal battery that provides power to the system clock even when the computer is unplugged, so the battery safety information applies to all computer products.

Conditions that require immediate action

Products can become damaged due to misuse or neglect. Some product damage is serious enough that the product should not be used again until it has been inspected and, if necessary, repaired by an authorized servicer.

As with any electronic device, pay close attention to the product when it is turned on. On very rare occasions, you might notice an odor or see a puff of smoke or sparks vent from your product. Or you might hear sounds like popping, cracking or hissing. These conditions might merely mean that an internal electronic component has failed in a safe and controlled manner. Or, they might indicate a potential safety issue. However, do not take risks or attempt to diagnose the situation yourself. Contact the Customer Support Center for further guidance. For a list of Service and Support phone numbers, see the following Web site:

http://www.lenovo.com/support/phone

Frequently inspect your computer and its components for damage or wear or signs of danger. If you have any question about the condition of a component, do not use the product. Contact the Customer Support Center or the product manufacturer for instructions on how to inspect the product and have it repaired, if necessary.

In the unlikely event that you notice any of the following conditions, or if you have any safety concerns with your product, stop using the product and unplug it from the power source and telecommunication lines until you can speak to the Customer Support Center for further guidance.

- Power cords, plugs, power adapters, extension cords, surge protectors, or power supplies that are cracked, broken, or damaged.
- Signs of overheating, smoke, sparks, or fire.
- Damage to a battery (such as cracks, dents, or creases), discharge from a battery, or a buildup of foreign substances on the battery.
- A cracking, hissing or popping sound, or strong odor that comes from the product.
- Signs that liquid has been spilled or an object has fallen onto the computer product, the power cord or power adapter.
- The computer product, power cord, or power adapter has been exposed to water.
- The product has been dropped or damaged in any way.
- The product does not operate normally when you follow the operating instructions.

Note: If you notice these conditions with a product (such as an extension cord) that is not manufactured for or by Lenovo, stop using that product until you can contact the product manufacturer for further instructions, or until you get a suitable replacement.

Safety guidelines

Always observe the following precautions to reduce the risk of injury and property damage.

For more information, see “Important safety information” in the *Safety and Warranty Guide* comes with your computer.

Service and upgrades

Do not attempt to service a product yourself unless instructed to do so by the Customer Support Center or your documentation. Only use a Service Provider who is approved to repair your particular product.

Note: Some computer parts can be upgraded or replaced by the customer. Upgrades typically are referred to as options. Replacement parts approved for customer installation are referred to as Customer

© Copyright Lenovo 2011

Replaceable Units, or CRUs. Lenovo provides documentation with instructions when it is appropriate for customers to install options or replace CRUs. You must closely follow all instructions when installing or replacing parts. The Off state of a power indicator does not necessarily mean that voltage levels inside a product are zero. Before you remove the covers from a product equipped with a power cord, always make sure that the power is turned off and that the product is unplugged from any power source. For more information on CRUs, refer to Chapter 6 “Replacing devices” on page 115 for this product. If you have any questions or concerns, contact the Customer Support Center.

Although there are no moving parts in your computer after the power cord has been disconnected, the following warnings are required for your safety.

DANGER

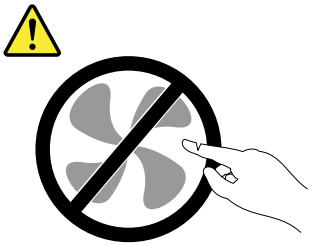

Hazardous moving parts. Keep fingers and other body parts away.

CAUTION:

Before replacing any CRUs, turn off the computer and wait three to five minutes to let the computer cool before opening the cover.

Power cords and power adapters

DANGER

Use only the power cords and power adapters supplied by the product manufacturer.

The power cords shall be safety approved. For Germany, it shall be H05VV-F, 3G, 0.75 mm^2, or better. For other countries, the suitable types shall be used accordingly.

Never wrap a power cord around a power adapter or other object. Doing so can stress the cord in ways that can cause the cord to fray, crack, or crimp. This can present a safety hazard.

Always route power cords so that they will not be walked on, tripped over, or pinched by objects.

Protect power cord and power adapters from liquids. For instance, do not leave your power cord or power adapter near sinks, tubs, toilets, or on floors that are cleaned with liquid cleansers. Liquids can cause a short circuit, particularly if the power cord or power adapter has been stressed by misuse. Liquids also can cause gradual corrosion of power cord terminals and/or the connector terminals on a power adapter, which can eventually result in overheating.

Always connect power cords and signal cables in the correct order and ensure that all power cord connectors are securely and completely plugged into receptacles.

Do not use any power adapter that shows corrosion at the AC input pins or shows signs of overheating (such as deformed plastic) at the AC input or anywhere on the power adapter.

Do not use any power cords where the electrical contacts on either end show signs of corrosion or overheating or where the power cord appears to have been damaged in any way.

Extension cords and related devices

Ensure that extension cords, surge protectors, uninterruptible power supplies, and power strips that you use are rated to handle the electrical requirements of the product. Never overload these devices. If power strips are used, the load should not exceed the power strip input rating. Consult an electrician for more information if you have questions about power loads, power requirements, and input ratings.

© Copyright Lenovo 2011

Plugs and outlets

DANGER

If a receptacle (power outlet) that you intend to use with your computer equipment appears to be damaged or corroded, do not use the outlet until it is replaced by a qualified electrician.

Do not bend or modify the plug. If the plug is damaged, contact the manufacturer to obtain a replacement.

Do not share an electrical outlet with other home or commercial appliances that draw large amounts of electricity; otherwise, unstable voltage might damage your computer, data, or attached devices.

Some products are equipped with a three-pronged plug. This plug fits only into a grounded electrical outlet. This is a safety feature. Do not defeat this safety feature by trying to insert it into a non-grounded outlet. If you cannot insert the plug into the outlet, contact an electrician for an approved outlet adapter or to replace the outlet with one that enables this safety feature. Never overload an electrical outlet. The overall system load should not exceed 80 percent of the branch circuit rating. Consult an electrician for more information if you have questions about power loads and branch circuit ratings.

Be sure that the power outlet you are using is properly wired, easily accessible, and located close to the equipment. Do not fully extend power cords in a way that will stress the cords.

Be sure that the power outlet provides the correct voltage and current for the product you are installing.

Carefully connect and disconnect the equipment from the electrical outlet.

Power supply statement

DANGER

Never remove the cover on a power supply or any part that has the following label attached.

Hazardous voltage, current, and energy levels are present inside any component that has this label attached. There are no serviceable parts inside these components. If you suspect a problem with one of these parts, contact a service technician.

External devices

CAUTION:
Do not connect or disconnect any external device cables other than Universal Serial Bus (USB) and 1394 cables while the computer power is on; otherwise, you might damage your computer. To avoid possible damage to attached devices, wait at least five seconds after the computer is shut down to disconnect external devices.

Batteries

DANGER

Personal computers manufactured by Lenovo contain a coin cell battery to provide power to the system clock. In addition, many mobile products, such as notebook computers, utilize a rechargeable battery pack to provide system power when in portable mode. Batteries supplied by Lenovo for use with your product have been tested for compatibility and should only be replaced with approved parts.

Never attempt to open or service any battery. Do not crush, puncture, or incinerate batteries or short circuit the metal contacts. Do not expose the battery to water or other liquids. Only recharge the battery pack strictly according to instructions included in the product documentation.

Battery abuse or mishandling can cause the battery to overheat, which can cause gasses or flame to "vent" from the battery pack or coin cell. If your battery is damaged, or if you notice any discharge from your battery or the buildup of foreign materials on the battery leads, stop using the battery and obtain a replacement from the battery manufacturer.

Batteries can degrade when they are left unused for long periods of time. For some rechargeable batteries (particularly Lithium Ion batteries), leaving a battery unused in a discharged state could increase the risk of a battery short circuit, which could shorten the life of the battery and can also pose a safety hazard. Do not let rechargeable Lithium-Ion batteries completely discharge or store these batteries in a discharged state.

Rechargeable battery notice

DANGER

Do not attempt to disassemble or modify the battery pack. Attempting to do so can cause an explosion, or liquid leakage from the battery pack. A battery pack other than the one specified by Lenovo, or a disassembled or modified battery pack is not covered by the warranty.

If the rechargeable battery pack is incorrectly replaced, there is danger of an explosion. The battery pack contains a small amount of harmful substances. To avoid possible injury:

- **Replace only with a battery of the type recommended by Lenovo.**
- **Keep the battery pack away from fire.**
- **Do not expose it to water or rain.**
- **Do not attempt to disassemble it.**
- **Do not short-circuit it.**
- **Keep it away from children.**
- **Do not drop the battery pack.**

Do not put the battery pack in trash that is disposed of in landfills. When disposing of the battery, comply with local ordinances or regulations.

The battery pack should be stored at room temperature, charged to approximately 30 to 50% of capacity. We recommend that battery pack be charged about once per year to prevent overdischarge.

© Copyright Lenovo 2011

Lithium coin cell battery notice

DANGER

Danger of explosion if battery is incorrectly replaced.

When replacing the lithium coin cell battery, use only the same or an equivalent type that is recommended by the manufacturer. The battery contains lithium and can explode if not properly used, handled, or disposed of.

Do not:

- **Throw or immerse into water**
- **Heat to more than 100°C (212°F)**
- **Repair or disassemble**

Dispose of the battery as required by local ordinances or regulations.

The following statement applies to users in the state of California, U.S.A.

California Perchlorate Information:

Products containing CR (manganese dioxide) lithium coin cell batteries may contain perchlorate.

Perchlorate Material - special handling may apply. Go to: http://www.dtsc.ca.gov/hazardouswaste/perchlorate

Heat and product ventilation

DANGER

Computers, ac power adapters, and many accessories can generate heat when turned on and when batteries are charging. notebook computers can generate a significant amount of heat due to their compact size. Always follow these basic precautions:

- **When your computer is turned on or the battery is charging, the base, the palm rest, and some other parts may become hot. Avoid keeping your hands, your lap, or any other part of your body in contact with a hot section of the computer for any extended length of time. When you use the keyboard, avoid keeping your palms on the palm rest for a prolonged period of time. Your computer generates some heat during normal operation. The amount of heat depends on the amount of system activity and the battery charge level. Extended contact with your body, even through clothing, could cause discomfort or even a skin burn. Periodically take breaks from using the keyboard by lifting your hands from the palm rest; and be careful not to use the keyboard for any extended length of time.**
- **Do not operate your computer or charge the battery near flammable materials or in explosive environments.**
- **Ventilation slots, fans and/or heat sinks are provided with the product for safety, comfort, and reliable operation. These features might inadvertently become blocked by placing the product on a bed, sofa, carpet, or other flexible surface. Never block, cover, or disable these features.**
- **When the ac power adapter is connected to an electrical outlet and your computer, it generates heat. Do not place the adapter in contact with any part of your body while using it. Never use the ac power adapter to warm your body. Extended contact with your body, even through clothing, may cause a skin burn.**

For your safety, always follow these basic precautions with your computer:

- **Keep the cover closed whenever the computer is plugged in.**
- **Regularly inspect the outside of the computer for dust accumulation.**
- **Remove dust from vents and any perforations in the bezel. More frequent cleanings might be required for computers in dusty or high-traffic areas.**
- **Do not restrict or block any ventilation openings.**
- **Do not operate your computer inside furniture, as this might increase the risk of overheating.**
- **Airflow temperatures into the computer should not exceed 35°C (95°F).**

© Copyright Lenovo 2011

Electrical current safety information

DANGER

Electric current from power, telephone, and communication cables is hazardous.

To avoid a shock hazard:

- **Do not use your computer during a lightning storm.**
- **Do not connect or disconnect any cables or perform installation, maintenance, or reconfiguration of this product during an electrical storm.**
- **Connect all power cords to a properly wired and grounded electrical outlet.**
- **Connect to properly wired outlets any equipment that will be attached to this product.**
- **Whenever possible, use one hand only to connect or disconnect signal cables.**
- **Never turn on any equipment when there is evidence of fire, water, or structural damage.**
- **Disconnect the attached power cords, battery pack, and all the cables before you open the device covers, unless instructed otherwise in the installation and configuration procedures.**
- **Do not use you computer until all internal parts enclosures are fastened into place. Never use the computer when internal parts and circuits are exposed.**

DANGER

Connect and disconnect cables as described in the following procedures when installing, moving, or opening covers on this product or attached devices.

To connect:

1. **Turn everything OFF.**
2. **Attach all cables to devices.**
3. **Attach signal cables to connectors.**
4. **Attach power cords to outlets.**
5. **Turn devices ON.**

To disconnect:

1. **Turn everything OFF.**
2. **Remove power cords from outlets.**
3. **Remove signal cables from connectors.**
4. **Remove all cables from devices.**

The power cord must be disconnected from the wall outlet or receptacle before installing all other electrical cables connected to the computer.

The power cord may be reconnected to the wall outlet or receptacle only after all other electrical cables have been connected to the computer.

Liquid crystal display (LCD) notice

CAUTION:
The LCD is made of glass, and rough handling or dropping the computer can cause the LCD to break. If the LCD breaks and the internal fluid gets into your eyes or on your hands, immediately wash the affected areas with water for at least 15 minutes; if any symptoms are present after washing, get medical care.

Using headphones or earphones

If your computer has both a headphone connector and an audio-out connector, always use the headphone connector for headphones (also called a headset) or earphones.

CAUTION:
Excessive sound pressure from earphones and headphones can cause hearing loss. Adjustment of

the equalizer to maximum increases the earphones and headphones output voltage and therefore the sound pressure level.

Excessive use of headphones or earphones for a long period of time at high volume can be dangerous if the output of the headphone or earphone connectors do not comply with specifications of EN 50332-2. The headphone output connector of your computer complies with EN 50332-2 Sub clause 7. This specification limits the computer's maximum wide band true RMS output voltage to 150 mV. To help protect against hearing loss, ensure that the headphones or earphones you use also comply with EN 50332-2 (Clause 7 limits) for a wide band characteristic voltage of 75 mV. Using headphones that do not comply with EN 50332-2 can be dangerous due to excessive sound pressure levels.

If your Lenovo computer came with headphones or earphones in the package, as a set, the combination of the headphones or earphones and the computer already complies with the specifications of EN 50332-1. If different headphones or earphones are used, ensure that they comply with EN 50332-1 (Clause 6.5 Limitation Values). Using headphones that do not comply with EN 50332-1 can be dangerous due to excessive sound pressure levels.

Additional safety information

DANGER

Plastic bags can be dangerous. Keep plastic bags away from babies and children to avoid danger of suffocation.

Notice for Tablet PC users

Safety Notice for users in Australia:

DANGER

Do not connect phone line while using tablet mode.

Notice for users in the U.S.A.

Many PC products and accessories contain cords, cables or wires, such as power cords or cords to connect the accessory to a PC. If this product has such a cord, cable or wire, then the following warning applies:

WARNING
Handling the cord on this product or cords associated with accessories sold with this product will expose you to lead, a chemical known to the State of California to cause cancer, and birth defects or other reproductive harm. Wash hands after handling.

Save these instructions.

© Copyright Lenovo 2011

Chapter 1. Product Overview

This chapter provides information about the locations of connectors, locating important product information, computer features, specifications, operating environment, and preinstalled software programs.

This chapter contains the following topics:

- “Locating computer controls, connectors, features, and indicators” on page 1
- “Locating important product information” on page 23
- “Specifications” on page 30
- “Operating environment” on page 32
- “ThinkVantage Technologies and software” on page 32

Locating computer controls, connectors, and indicators

This section introduces you to the hardware features of your computer, and then gives you the basic information you'll need to start taking advantage of its functions.

- Front
- Right-side
- Left-side
- Rear
- Bottom
- Status indicators

Front view

This section introduces front view of your notebook computer.

© Copyright Lenovo 2011

ThinkPad X220 and X220i front view

Figure 1. ThinkPad X220 and X220i front view

1 Wireless WAN (auxiliary) and Wireless LAN/WiMAX (auxiliary)	**2** ThinkLight
3 Integrated camera	**4** Wireless LAN (third), Wireless LAN/WiMAX (main), and Wireless WAN (main)
5 Computer display	**6** System and power-status indicators
7 Power switch	**8** PCI Express Mini Card slot for wireless LAN/WiMAX
9 PCI Express Mini Card slot for wireless WAN or mSATA solid state drive (SSD)	**10** Fingerprint reader
11 TrackPoint buttons	**12** Touch pad
13 TrackPoint pointing stick	**14** Fn key
15 CapsLock indicator	**16** ThinkVantage button
17 Volume control buttons	**18** Built-in microphones

1 Wireless WAN (auxiliary) and Wireless LAN/WiMAX (auxiliary)

4 Wireless LAN (third), Wireless LAN/WiMAX (main), and Wireless WAN (main)

The built-in antennas for the wireless communication are located at the top left and the top right portions of your computer display.

For the specific locations of each antenna, refer to “Location of the UltraConnect wireless antennas” on page 244.

2 ThinkLight

You can use your computer under less than perfect lighting conditions.

To illuminate the keyboard, turn on the ThinkLight® by pressing Fn+PgUp. To turn it off, press Fn+PgUp again.

3 Integrated camera

Some models have the integrated camera. By using this camera, you can take pictures or hold a video conference.

For more information about how to use the camera, refer to “Using an integrated camera” on page 78.

5 Computer display

The high-resolution, thin-film transistor (TFT) display provides clear and brilliant text and graphics.

For details, refer to the instructions in “Changing display settings” on page 70.

6 System and power-status indicators

Your computer has the system status indicators and the power status indicators. For the detailed information about the location and meaning of each indicator, see “ThinkPad X220i and X220i status indicators” on page 18.

7 Power switch

Use the power switch to turn on the computer. To turn off your computer, use the Start menu shutdown options.

If you cannot turn off the computer by this method, press and hold the power switch for 2 seconds.

If your computer stops responding, and you cannot turn it off, press and hold the power switch for 4 seconds or more. If the system is still not reset, remove the ac power adapter and the battery.

The power switch can also be programmed via Power Manager to shut down the computer or put it into sleep (standby) or hibernation.

8 PCI Express Mini Card slot for wireless LAN/WiMAX

Your computer might include a PCI Express Mini Card in the PCI Express Mini Card slot which enables wireless LAN/WiMAX communications.

9 PCI Express Mini Card slot for wireless WAN or mSATA solid state drive (SSD)

Your computer might include a PCI Express Mini Card in the PCI Express Mini Card slot which enables wireless WAN communications.

With Lenovo technologies advancing to provide you with the best engineered systems, some models are equipped with an mSATA solid state drive for data storage. This cutting-edge technology enables notebook computers to be lighter, smaller and faster.

10 Fingerprint reader

Some models have the fingerprint reader. The fingerprint authentication technology enables you to use your fingerprint to start the computer and enter the ThinkPad Setup.

For details, refer to the instructions in “Using a fingerprint reader” on page 97.

11 TrackPoint buttons

12 Touch pad

13 TrackPoint pointing stick

The keyboard contains the unique TrackPoint® pointing device. Pointing, selecting, and dragging are all part of a single process that you can perform without moving your fingers from typing position.

Move your fingertip across the UltraNav® touch pad to move the pointer.

The TrackPoint and TrackPoint buttons provide functions similar to those of a mouse and its buttons.

14 Fn key

Use the Fn key to take advantage of ThinkPad® functions, such as turning on the ThinkLight. To use ThinkPad functions, press Fn + the required function key marked in blue.

15 CapsLock indicator

The indicator of CapsLock is located on the CapsLock key.

For more information about CapsLock indicator, see “ThinkPad X220i and X220i status indicators” on page 18.

16 ThinkVantage button

You can also use the ThinkVantage® button to interrupt the startup sequence of your computer and start the Rescue and Recovery® workspace, which runs independently of the Windows® operating system and is hidden from it.

Note: If your computer is a Windows 7 model, Lenovo ThinkVantage Toolbox will be displayed.

17 Volume control buttons

The built-in volume buttons enable you to quickly adjust the volume or mute the sound from your computer.

For details, refer to the instructions in “Volume and mute buttons” on page 52.

18 Built-in microphones

The built-in microphones capture sound and voice when they are used with an application program capable of handling audio.

ThinkPad X220 Tablet and X220i Tablet front view

Figure 2. Front view

1 Wireless WAN (auxiliary) and Wireless LAN/WiMAX (auxiliary)	**2** Integrated camera
3 Built-in microphones	**4** Wireless LAN (third), Wireless WAN (main), and Wireless LAN/WiMAX (main)
5 Computer display	**6** Fingerprint reader
7 Power switch	**8** ThinkVantage button
9 PCI Express Mini Card slot for wireless LAN/WiMAX	**10** PCI Express Mini Card slot for wireless WAN or mSATA solid state drive (SSD)
11 TrackPoint pointing stick	**12** TrackPoint buttons
13 Touch pad	**14** CapsLock indicator
15 Fn key	**16** Volume control buttons
17 System and power-status indicators	**18** Tablet Buttons
19 Built-in stereo speakers	

1 Wireless WAN (auxiliary) and Wireless LAN/WiMAX (auxiliary)

4 Wireless LAN (third), Wireless WAN (main), and Wireless LAN/WiMAX (main)

The built-in antennas for the wireless communication are located at the top left and the top right portions of your computer display.

For the specific locations of each antenna, refer to “Location of the UltraConnect wireless antennas” on page 244.

2 Integrated camera

Some models have the integrated camera. By using this camera, you can take pictures or hold a video conference.

For more information about how to use the camera, refer to “Using an integrated camera” on page 78.

3 Built-in microphones

The built-in microphones capture sound and voice when they are used with an application program capable of handling audio.

5 Computer display

The high-resolution, thin-film transistor (TFT) display provides clear and brilliant text and graphics.

For details, refer to the instructions in “Changing display settings” on page 70.

6 Fingerprint reader

Some models have the fingerprint reader. The fingerprint authentication technology enables you to use your fingerprint to start the computer and enter the ThinkPad Setup.

For details, refer to the instructions in “Using a fingerprint reader” on page 100.

7 Power switch

Use the power switch to turn on the computer. To turn off your computer, use the Start menu shutdown options.

If you cannot turn off the computer by this method, press and hold the power switch for 2 seconds.

If your computer stops responding, and you cannot turn it off, press and hold the power switch for 4 seconds or more. If the system is still not reset, remove the ac power adapter and the battery.

The power switch can also be programmed via Power Manager to shut down the computer or put it into sleep (standby) or hibernation.

8 ThinkVantage button

You can use the ThinkVantage button to interrupt the startup sequence of your computer and start the Rescue and Recovery workspace, which runs independently of the Windows operating system and is hidden from it.

Note: If your computer is a Windows 7 model, you can press ThinkVantage button to open Lenovo ThinkVantage Toolbox.

9 PCI Express Mini Card slot for wireless LAN/WiMAX

Your computer might include a PCI Express Mini Card in the PCI Express Mini Card slot which enables wireless LAN/WiMAX communications.

10 PCI Express Mini Card slot for wireless WAN or mSATA solid state drive (SSD)

Your computer might include a PCI Express Mini Card in the PCI Express Mini Card slot which enables wireless WAN communications.

With Lenovo technologies advancing to provide you with the best engineered systems, some models are equipped with an mSATA solid state drive for data storage. This cutting-edge technology enables notebook computers to be lighter, smaller and faster.

11 TrackPoint pointing stick

12 TrackPoint buttons

13 Touch pad

The keyboard contains the unique TrackPoint pointing device. Pointing, selecting, and dragging are all part of a single process that you can perform without moving your fingers from typing position.

Move your fingertip across the UltraNav touch pad to move the pointer.

The TrackPoint and TrackPoint buttons provide functions similar to those of a mouse and its buttons.

14 CapsLock indicator

The indicator of CapsLock is located on the CapsLock key.

For more information about CapsLock indicator, see “ThinkPad X220i and X220i Tablet status indicators” on page 21.

15 Fn key

Use the Fn key to take advantage of ThinkPad functions, such as turning on the ThinkLight. To use ThinkPad functions, press Fn + the required function key marked in blue.

16 Volume control buttons

The built-in volume buttons enable you to quickly adjust the volume or mute the sound from your computer.

For details, refer to the instructions in “Volume and mute buttons” on page 52.

17 System and power-status indicators

Your computer has the system status indicators and the power status indicators. For the detailed information about the location and meaning of each indicator, see “ThinkPad X220i and X220i Tablet status indicators” on page 21.

18 Tablet Buttons

The Tablet Buttons allow you to control your computer in tablet mode, even without the use of the keyboard and UltraNav.

19 Built-in stereo speakers

The stereo speakers are built into your computer.

For details, refer to the instructions in “Volume and mute buttons” on page 52.

Right-side view

This section provides right-side view for your computer.

ThinkPad X220 and X220i right-side view

Figure 3. Right-side view

1 Security keyhole
2 Hard disk drive or solid state drive
3 Combo audio jack
4 Ethernet connector
5 Always On USB connector
6 Media card reader slot

1 Security keyhole

Your computer comes with a security keyhole. You can purchase a security cable and lock to fit this keyhole.

2 Hard disk drive or solid state drive

Your computer may have a large-capacity, customer-upgradable hard disk drive that can meet a variety of storage demands. To keep the drive safe, Active Protection System™ is installed on your computer. For details, refer to “Access Connections” on page 35

If you wish, you can purchase another hard disk drive and install it in the Serial Ultrabay™ slim in the ThinkPad X220 UltraBase™.

With Lenovo technologies advancing to provide you with the best engineered systems, some models are equipped with a solid state drive (SSD) for data storage. This cutting-edge technology enables notebook computers to be lighter, smaller and faster.

Note: The hidden service partition is the reason why there is less free space than expected on your hard disk drive or SSD. This reduction is more noticeable on the SSD because of its smaller capacity.

3 Combo audio jack

To listen to the sound from your computer, connect a headphone or a headset, that has a 3.5mm 4-pole plug, to the combo audio jack.

Notes:

- If you are using a headset with a function switch, for example, a headset for an iPhone® mobile digital device, do not press this switch while using the headset. If you press it, the headset microphone will be disabled, and the internal microphone will be enabled instead.
- The combo audio jack does not support a conventional microphone. For more information about the audio devices supported by the combo audio jack of your compute, see “Using audio features” on page 77.

4 Ethernet connector

Connect your computer to a LAN with the Ethernet connector.

DANGER

To avoid the risk of electrical shock, do not connect the telephone cable to the Ethernet connector. You can only connect an Ethernet cable to this connector.

Two indicators, to the upper right and left of the connector, show the status of the network connection. When your computer connects to a LAN and a session with the network is available, the upper right indicator is solid green. While data is being transmitted, the upper left indicator blinks yellow.

For details, refer to the instructions in “Access Connections” on page 35.

Note: If you attach your computer to the ThinkPad Port Replicator Series 3, ThinkPad Mini Dock Series 3, or ThinkPad Mini Dock Plus Series 3 and use an Ethernet connector, use the Ethernet connector on the ThinkPad Port Replicator Series 3, ThinkPad Mini Dock Series 3, or ThinkPad Mini Dock Plus Series 3, not the one on the computer.

5 Always On USB connector

The Universal Serial Bus connectors are used for connecting devices compatible with a USB interface, such as a printer or a digital camera.

By default, even if your computer is in sleep (standby) mode, the Always On USB connector still enables you to charge some devices, such as iPod®, iPhone, and BlackBerry® smartphones, by attaching the devices to the connector.

However, with the ac power adapter attached, if you want to charge these devices when your computer is in hibernation mode or powered off, you will need to open the Power Manager program and configure corresponding settings to enable the Always On USB connector function. For details about how to enable the Always On USB connector function, refer to the on-line help of the Power Manager program.

Note: Your computer is compatible with USB 1.1 and 2.0.

6 Media card reader slot

Depending on the model, your computer may have a media card reader slot. The media card reader supports the following cards:

- SD card
- SDHC card
- SDXC card
- MultiMediaCard

Note: Your computer does not support the CPRM feature for SD card.

For details, refer to the instructions in “Using an ExpressCard, a smart card, or a flash media card” on page 79.

ThinkPad X220 Tablet and X220i Tablet right-side view

Figure 4. Right-side view

1 Security keyhole
2 Tablet Digitizer Pen
3 Hard disk drive or solid state drive
4 Combo audio jack
5 Ethernet connector
6 Always On USB connector
7 Media card reader slot

1 Security keyhole

Your computer comes with a security keyhole. You can purchase a security cable and lock to fit this keyhole.

2 Tablet Digitizer Pen

The Tablet Digitizer Pen is used to control your computer in “Tablet mode” on page 41 as you would a mouse and a keyboard.

3 Hard disk drive or solid state drive

Your computer may have a large-capacity, customer-upgradable hard disk drive that can meet a variety of storage demands. To keep the drive safe, Active Protection System is installed on your computer. For details, refer to “Access Connections” on page 35.

If you wish, you can purchase another hard disk drive and install it in the Serial Ultrabay slim in the ThinkPad X220 UltraBase.

With Lenovo technologies advancing to provide you with the best engineered systems, some models are equipped with a solid state drive (SSD) for data storage. This cutting-edge technology enables notebook computers to be lighter, smaller and faster.

Note: The hidden service partition is the reason why there is less free space than expected on your hard disk drive or SSD. This reduction is more noticeable on the SSD because of its smaller capacity.

4 Combo audio jack

To listen to the sound from your computer, connect a headphone or a headset, that has a 3.5mm 4-pole plug, to the combo audio jack.

Notes:

- If you are using a headset with a function switch, for example, a headset for an iPhone mobile digital device, do not press this switch while using the headset. If you press it, the headset microphone will be disabled, and the internal microphone will be enabled instead.
- The combo audio jack does not support a conventional microphone. For more information about the audio devices supported by the combo audio jack of your computer, see “Using audio features” on page 77.

5 Ethernet connector

Connect your computer to a LAN with the Ethernet connector.

DANGER

To avoid the risk of electrical shock, do not connect the telephone cable to the Ethernet connector. You can only connect an Ethernet cable to this connector.

Two indicators, to the upper right and left of the connector, show the status of the network connection. When your computer connects to a LAN and a session with the network is available, the upper right indicator is solid green. While data is being transmitted, the upper left indicator blinks yellow.

For details, refer to the instructions in “Access Connections” on page 35.

Note: If you attach your computer to the ThinkPad Port Replicator Series 3, ThinkPad Mini Dock Series 3, or ThinkPad Mini Dock Plus Series 3 and use an Ethernet connector, use the Ethernet connector on the ThinkPad Port Replicator Series 3, ThinkPad Mini Dock Series 3, or ThinkPad Mini Dock Plus Series 3, not the one on the computer.

6 Always On USB connector

The Universal Serial Bus connectors are used for connecting devices compatible with a USB interface, such as a printer or a digital camera.

By default, even if your computer is in sleep (standby) mode, the Always On USB connector still enables you to charge some devices, such as iPod, iPhone, and BlackBerry smartphones, by attaching the devices to the connector.

However, with the ac power adapter attached, if you want to charge these devices when your computer is in hibernation mode or powered off, you will need to open the Power Manager program and configure corresponding settings to enable the Always On USB connector function. For details about how to enable the Always On USB connector function, refer to the on-line help of the Power Manager program.

Note: Your computer is compatible with USB 1.1 and 2.0.

7 Media card reader slot

Depending on the model, your computer may have a media card reader slot. The media card reader supports the following cards:

- SD card
- SDHC card
- SDXC card

- MultiMediaCard

Note: Your computer does not support the CPRM feature for SD card.

For details, refer to the instructions in “Using an ExpressCard, a smart card, or a flash media card” on page 79.

Left-side view

This section provides left-side view for your computer.

ThinkPad X220 and X220i left-side view

Figure 5. Left-side view

1 ExpressCard slot
2 Wireless radio switch
3 USB connector (left)
4 DisplayPort connector
5 Monitor connector
6 USB connector
7 Fan louvers (left)

1 ExpressCard slot

Your computer has an ExpressCard slot for a 54 mm-wide card.

For details, refer to the instructions in “Using an ExpressCard, a smart card, or a flash media Card” on page 79.

2 Wireless radio switch

You can quickly turn the wireless features of your computer on and off using this switch.

3 USB connector (left)

The Universal Serial Bus connector is used for connecting devices compatible with a USB interface, such as a printer or a digital camera.

Note: Your computer is compatible with USB 1.1 and 2.0.

When you attach a USB cable to the connector, make sure that the mark is to the upper side. Otherwise the connector might be damaged.

4 DisplayPort connector

Your computer supports the DisplayPort, a next-generation digital display interface that connects a compatible projector, external monitor, or HDTV to your computer.

5 Monitor connector

You can attach an external monitor or a projector to your computer to display computer information.

Note: If you attach your computer to the ThinkPad Port Replicator Series 3, ThinkPad Mini Dock Series 3, ThinkPad Mini Dock Plus Series 3, or ThinkPad X220 Ultrabase and use a monitor connector, use the monitor connector on the ThinkPad Port Replicator Series 3, ThinkPad Mini Dock Series 3, ThinkPad Mini Dock Plus Series 3, or ThinkPad X220 Ultrabase , not the one on the computer.

For details, refer to the instructions in “Attaching an external monitor” on page 71.

6 USB connector

The Universal Serial Bus connectors are used for connecting devices compatible with a USB interface, such as a printer or a digital camera.

Notes:

- Your computer may look slightly different from the illustrations.
- Your computer is compatible with USB 1.1 and 2.0. Some models are also compatible with USB 3.0.
- If your computer is a USB 3.0 model, any function specific to USB 3.0 will not work until your Windows operating system has been started. However, USB 2.0 or 1.0 devices will work.

7 Fan louvers (left)

The internal fan and louvers enable air to circulate in the computer and cool the central processor.

Note: To avoid impeding airflow, do not place any obstacle in front of the fan.

ThinkPad X220 Tablet and X220i Tablet left-side view

Figure 6. Left-side view

1 ExpressCard slot
2 Wireless radio switch
3 USB connectors (left)
4 DisplayPort connector
5 Monitor connector
6 USB connector
7 Fan louvers (left)

1 ExpressCard slot

Your computer has an ExpressCard slot for a 54 mm-wide card.

For details, refer to the instructions in “Using an ExpressCard, a smart card, or a flash media Card” on page 79.

2 Wireless radio switch

You can quickly turn the wireless features of your computer on and off using this switch.

3 USB connectors (left)

The Universal Serial Bus connectors are used for connecting devices compatible with a USB interface, such as a printer or a digital camera.

Note: Your computer is compatible with USB 1.1 and 2.0.

When you attach a USB cable to the connector, make sure that the mark is to the upper side. Otherwise the connector might be damaged.

4 DisplayPort connector

Your computer supports the DisplayPort, a next-generation digital display interface that connects a compatible projector, external monitor, or HDTV to your computer.

5 Monitor connector

You can attach an external monitor or a projector to your computer to display computer information.

Note: If you attach your computer to the ThinkPad X220 Ultrabase and use a monitor connector, use the monitor connector on the ThinkPad X220 Ultrabase, not the one on the computer.

For details, refer to the instructions in “Attaching an external monitor” on page 71.

6 USB connector

The Universal Serial Bus connectors are used for connecting devices compatible with a USB interface, such as a printer or a digital camera.

Notes:

- Your computer may look slightly different from the illustrations.
- Your computer is compatible with USB 1.1 and 2.0. Some models are also compatible with USB 3.0.
- If your computer is a USB 3.0 model, any function specific to USB 3.0 will not work until your Windows operating system has been started. However, USB 2.0 or 1.0 devices will work.

7 Fan louvers (left)

The internal fan and louvers enable air to circulate in the computer and cool the central processor.

Note: To avoid impeding airflow, do not place any obstacle in front of the fan.

Bottom view

This section provides bottom view for your computer.

ThinkPad X220 and X220i bottom view

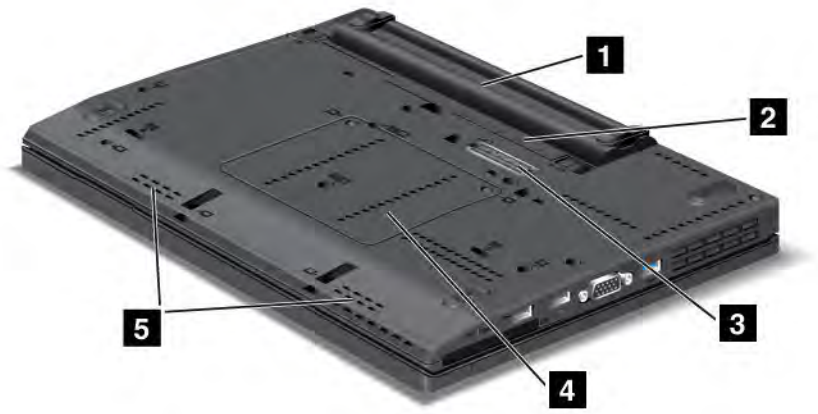

Figure 7. Bottom view

1 Battery
2 SIM card slot
3 Docking connector
4 Memory-upgrade slot
5 Built-in stereo speakers

1 Battery

Use your computer with battery power whenever ac power is unavailable.

By installing a second battery, available as an option, in the n the serial Ultrabay slim, you can extend the operating time of the computer. You can also use Power Manager to adjust your power setting as needed.

For details, refer to the instructions in “Power Manager” on page 37.

2 SIM card slot

If your computer has a wireless WAN feature, it may require a SIM (Subscriber Identification Module) card to establish a wireless WAN (Wide Area Network) connections. Depending on the country of delivery, the SIM card may be already installed in the SIM card slot.

3 Docking connector

With a ThinkPad Port Replicator Series 3, ThinkPad Mini Dock Series 3, ThinkPad Mini Dock Plus Series 3, or ThinkPad X220 Ultrabase, you can extend the computer capabilities when you are in your office or at home.

4 Memory-upgrade slot

You can increase the amount of memory in your computer by installing a memory module in the memory bay. Memory modules are available as options.

5 Built-in stereo speakers

The stereo speakers are built into your computer.

For details, refer to the instructions in “Volume and mute buttons” on page 52.

ThinkPad X220 Tablet and X220i Tablet bottom view

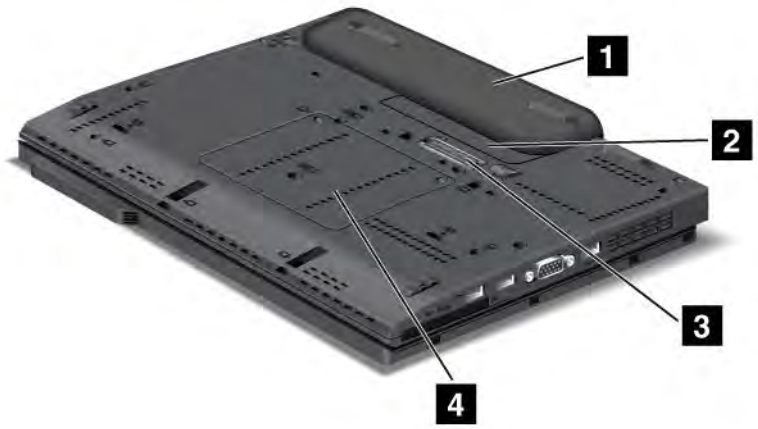

Figure 8. Bottom view

1 Battery

2 SIM card slot

3 Docking connector

4 Memory-upgrade slot

1 Battery

Use your computer with battery power whenever ac power is unavailable.

For details, refer to the instructions in “Power Manager” on page 37.

2 SIM card slot

If your computer has a wireless WAN feature, it may require a SIM (Subscriber Identification Module) card to establish a wireless WAN (Wide Area Network) connections. Depending on the country of delivery, the SIM card may be already installed in the SIM card slot.

3 Docking connector

With a ThinkPad X220 Ultrabase, you can extend the computer capabilities when you are in your office or at home.

4 Memory-upgrade slot

You can increase the amount of memory in your computer by installing a memory module in the memory bay. Memory modules are available as options.

Rear view

This section introduces rear view of your computer.

ThinkPad X220 and X220i rear view

Figure 9. Rear view

1 Power jack

2 Fan louvers (rear)

1 Power jack

The ac power adapter cable connects to the computer power jack to provide power to the computer and charge the battery.

2 Fan louvers (rear)

The internal fan and louvers enable air to circulate in the computer and cool the central processor.

Note: To avoid impeding airflow, do not place any obstacle in front of the fan.

ThinkPad X220 Tablet and X220i Tablet rear view

Figure 10. Rear view

1 Power jack	2 Fan louvers (rear)

1 Power jack

The ac power adapter cable connects to the computer power jack to provide power to the computer and charge the battery.

2 Fan louvers (rear)

The internal fan and louvers enable air to circulate in the computer and cool the central processor.

Note: To avoid impeding airflow, do not place any obstacle in front of the fan.

Status indicators

Your computer has system-status indicators and power-status indicators. The status indicators show the current status of your computer.

ThinkPad X220i and X220i status indicators

Your computer has system-status indicators and power-status indicators. The status indicators show the current status of your computer.

Status indicators

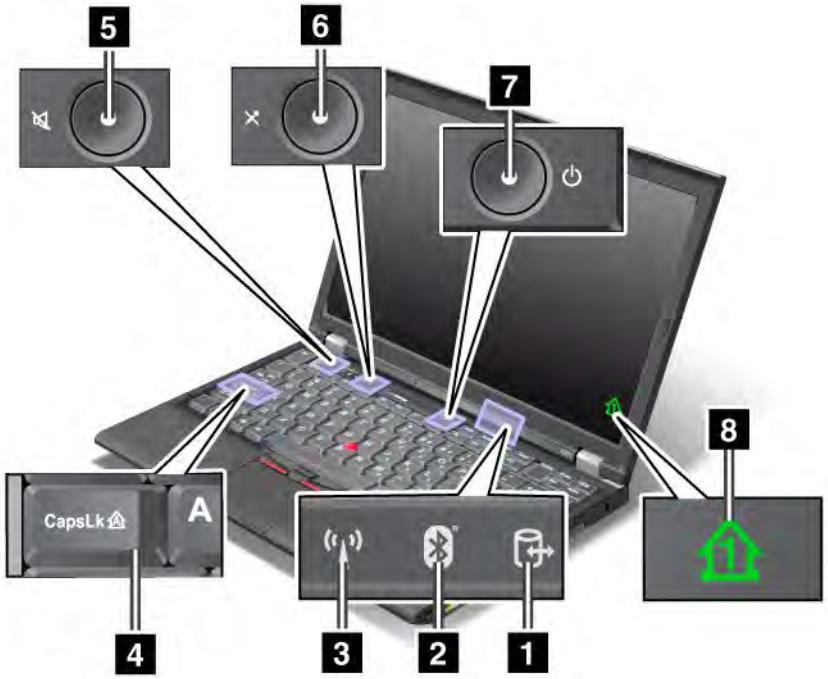

1 Device Access

A hard disk drive or an optional drive, such as a drive in the Ultrabay, is being used to read or write data. **When this indicator is blinking, do not put the computer into sleep (standby) mode, remove the device from the bay, or turn off the computer.**

2 *Bluetooth* status

- **Green**: The feature is on, and the radio link is ready for use, or the data is being transmitted.
- **Off**: The *Bluetooth* feature is disabled.

3 Wireless LAN/Wireless WAN/WiMAX status

- **Green**: The wireless LAN feature (the 802.11b/g Standard, 802.11a/b/g or 802.11n draft 2.0), wireless WAN feature or WiMAX feature is on, and the radio link is ready for use, or the data is being transmitted.
- **Off**: Wireless network devices are disabled or the radio is turned off.

4 Caps Lock

Caps Lock mode is enabled. You can enter all alphabetic characters (A-Z) in upper case without pressing the Shift key.

6 Speaker mute button and **5 Microphone mute button**

If you mute the sound and then turn off your computer, the sound will remain muted when you turn on your computer again. To turn on the sound, press the plus (**+**) or minus (**-**) button.

7 Power On

The power switch stays lit whenever the computer is on, blinks when the computer is in sleep (standby) mode, and is off when the computer is off.

8 Numeric lock

By default, when the numeric lock is on, the numeric lock indicator is displayed on the screen. To change the settings of the numeric lock indicator, see “Changing display settings” on page 70.

Note: Another mode available for your computer, though there is no indicator for it, is Scroll Lock mode. When this mode is enabled, the arrow keys can be used as function keys for screen-scrolling, but not for moving the cursor. To enable or disable this mode, press ScrLk. Not all application programs support this function.

Power-status indicators

The computer has status indicators that show the mode (sleep/standby, hibernation, or normal), ac power status, the status of the battery, and the status of the color sensor (on some models). The following shows the location and the meaning of the indicators:

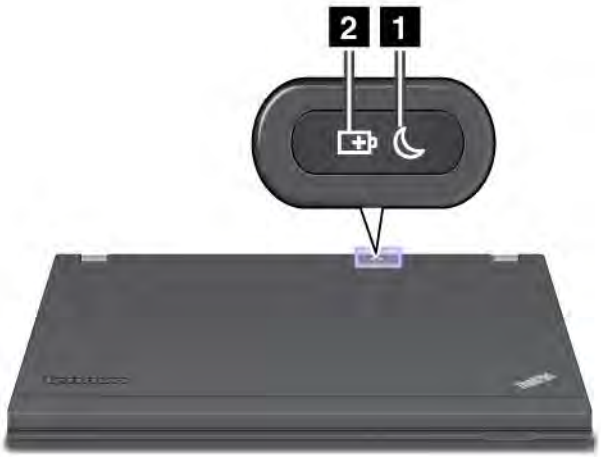

1 Sleep (standby in Windows XP) status

- **Green**: The computer is in sleep (standby) mode.
- **Blinking green**: The computer is entering sleep (standby) or hibernation mode, or is resuming normal operation.

2 Battery status

- **Green**: The battery charge level is 20% or higher
- **Orange**: The battery charge level is between 5% and 20%.
- **Fast blinking orange**: The battery charge level is lower than 5%.
- **Slow blinking orange**: The battery is being charged. When it reaches 20%, the blinking color changes to green.
- **Slow blinking green**: The battery has between 20% and 80% charge, and charging is continuing. When the battery reaches 80% charge, the battery status indicator stops blinking, but the charging may continue until the battery is 100% charged.

  Note: If the computer is operating on battery power, the battery status indicator does not work while the computer is turned off or is in sleep (standby) mode or hibernation mode.
- **Quick blinking orange**: An error occurred in the battery.
- **The battery status indicator blinks three times**: The ac power adapter is attached to the computer.

- **The battery status indicator is off**: The battery is fully charged or the battery is detached.

ThinkPad X220i and X220i Tablet status indicators

Your computer has system-status indicators and power-status indicators. The status indicators show the current status of your computer.

Status indicators

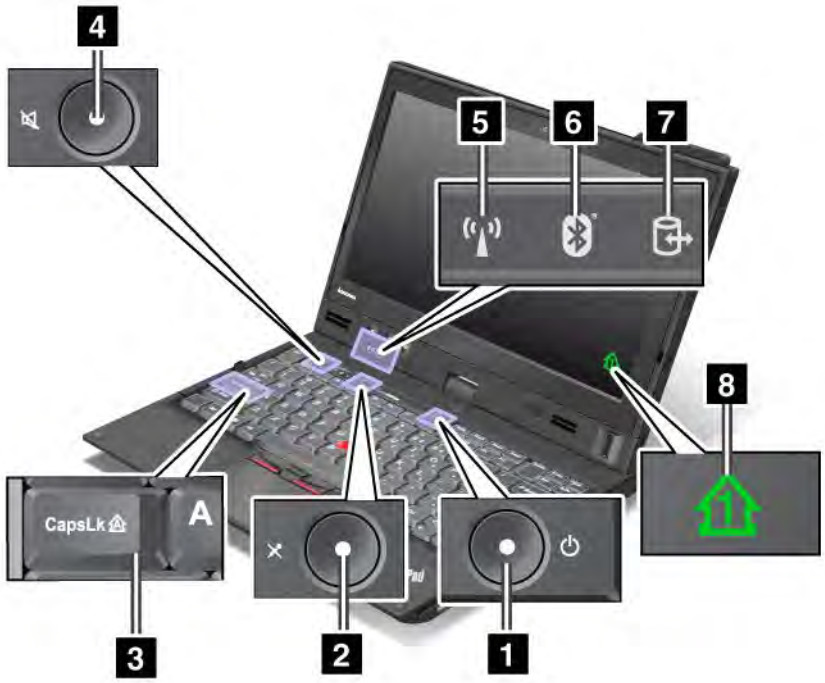

1 Power On

The power switch stays lit whenever the computer is on, blinks when the computer is in sleep (standby) mode, and is off when the computer is off.

2 Speaker mute button and **4 Microphone mute button**

If you mute the sound and then turn off your computer, the sound will remain muted when you turn on your computer again. To turn on the sound, press the plus (**+**) or minus (**-**) button.

3 Caps Lock

Caps Lock mode is enabled. You can enter all alphabetic characters (A-Z) in upper case without pressing the Shift key.

5 Wireless LAN/Wireless WAN/WiMAX status

- **Green**: The wireless LAN feature (the 802.11b/g Standard, 802.11a/b/g or 802.11n draft 2.0), wireless WAN feature or WiMAX feature is on, and the radio link is ready for use, or the data is being transmitted.
- **Off**: Wireless network devices are disabled or the radio is turned off.

6 *Bluetooth* status

- **Green**: The feature is on, and the radio link is ready for use, or the data is being transmitted.
- **Off**: The *Bluetooth* feature is disabled.

7 Device Access

A hard disk drive or an optional drive, such as a drive in the Ultrabay, is being used to read or write data. **When this indicator is blinking, do not put the computer into sleep (standby) mode, remove the device from the bay, or turn off the computer.**

8 Numeric lock

By default, when the numeric lock is on, the numeric lock indicator is displayed on the screen. To change the settings of the numeric lock indicator, see “Changing display settings” on page 70.

Note: Another mode available for your computer, though there is no indicator for it, is Scroll Lock mode. When this mode is enabled, the arrow keys can be used as function keys for screen-scrolling, but not for moving the cursor. To enable or disable this mode, press ScrLk. Not all application programs support this function.

Power-status indicators

The computer has status indicators that show the mode (sleep/standby, hibernation, or normal), ac power status, the status of the battery, and the status of the color sensor (on some models). The following shows the location and the meaning of the indicators:

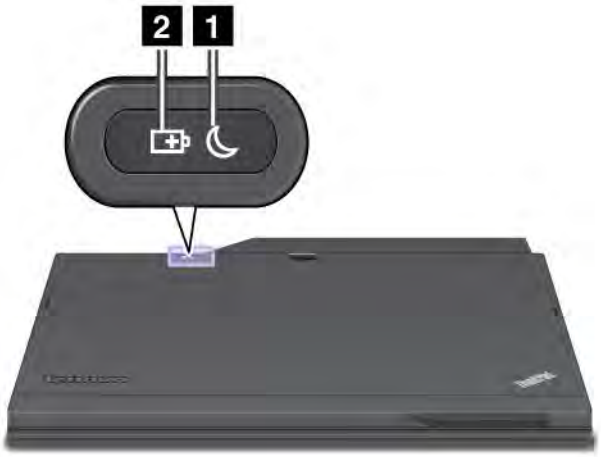

1 Sleep (standby in Windows XP) status

- **Green**: The computer is in sleep (standby) mode.
- **Blinking green**: The computer is entering sleep (standby) or hibernation mode, or is resuming normal operation.

2 Battery status

- **Green**: The battery charge level is 20% or higher
- **Orange**: The battery charge level is between 5% and 20%.
- **Fast blinking orange**: The battery charge level is lower than 5%.
- **Slow blinking orange**: The battery is being charged. When it reaches 20%, the blinking color changes to green.
- **Slow blinking green**: The battery has between 20% and 80% charge, and charging is continuing. When the battery reaches 80% charge, the battery status indicator stops blinking, but the charging may continue until the battery is 100% charged.

Note: If the computer is operating on battery power, the battery status indicator does not work while the computer is turned off or is in sleep (standby) mode or hibernation mode.

- **Quick blinking orange**: An error occurred in the battery.
- **The battery status indicator blinks three times**: The ac power adapter is attached to the computer.
- **The battery status indicator is off**: The battery is fully charged or the battery is detached.

Locating important product information

This section provides information to help you locate your machine type and model label, FCC ID and IC Certification label, and Windows Certificate of Authenticity.

Machine type and model label

The machine type and model label identifies your computer. If you contact Lenovo for help, the machine type and model number will help support technicians to identify your computer and provide the highest level of service.

You can find the machine type and model of your computer in the label as shown below:

ThinkPad X220 and X220i

ThinkPad X220 Tablet and X220i Tablet

FCC ID and IC Certification number label

This section provides FCC ID and IC Certification number label location for your computer.

ThinkPad X220 and X220i FCC ID and IC Certification number label

There is no FCC ID or IC Certification number for the PCI Express Mini Card shown on the enclosure of your computer. The FCC ID and IC Certification number label is affixed on the card installed in the PCI Express Mini Card slot of your computer.

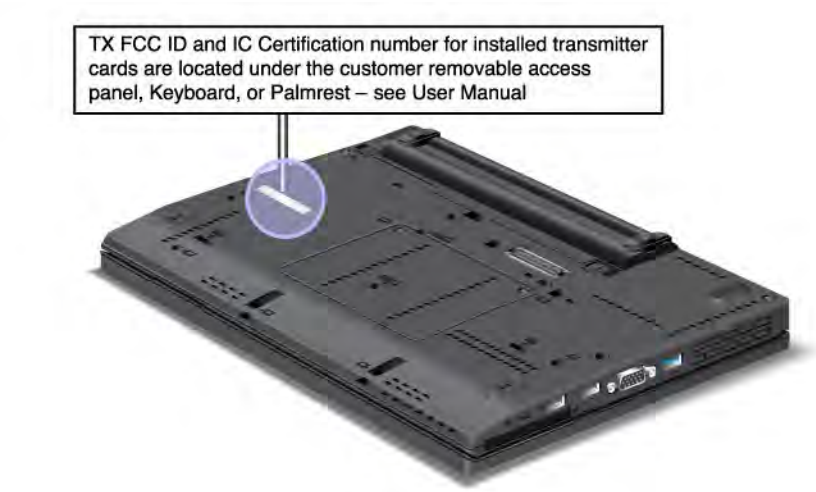

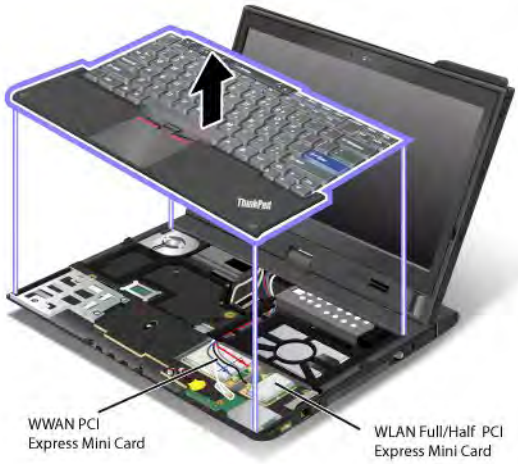

If no integrated wireless PCI Express Mini Card has been preinstalled in your computer, you can install one. To do this, follow the procedure in “Installing and replacing the PCI Express Mini Card for wireless LAN/WiMAX connection” on page 131 or “Installing and replacing the PCI Express Mini Card for wireless WAN connection” on page 137.

ThinkPad X220 Tablet and X220i Tablet FCC ID and IC Certification number label

There is no FCC ID or IC Certification number for the PCI Express Mini Card shown on the enclosure of your computer. The FCC ID and IC Certification number label is affixed on the card installed in the PCI Express Mini Card slot of your computer.

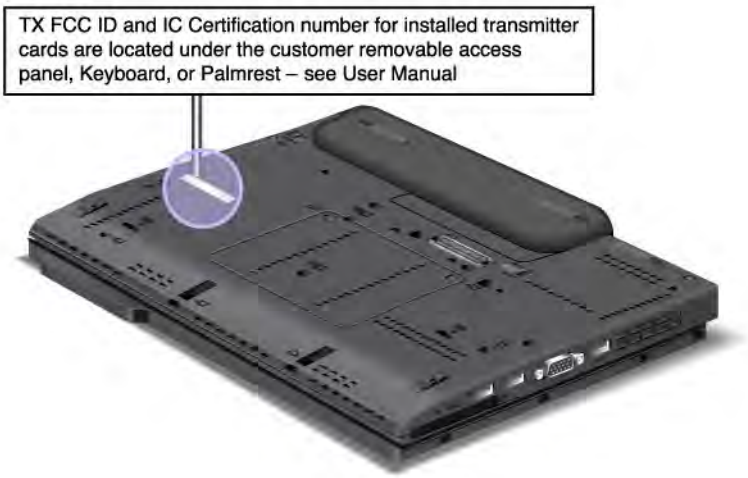

If no integrated wireless PCI Express Mini Card has been preinstalled in your computer, you can install one. To do this, follow the procedure in “Installing and replacing the PCI Express Mini Card for wireless LAN/WiMAX connection” on page 131 or “Installing and replacing the PCI Express Mini Card for wireless WAN connection” on page 137.

Certificate of Authenticity label

The Microsoft® Certificate of Authenticity label for the preinstalled operating system is attached. Printed on this label are the product ID and the product key information for your computer. Record this information and keep it in a safe place. You might need these numbers to start your computer or reinstall the operating system.

The Windows Certificate of Authenticity of your computer is shown as below:

ThinkPad X220 and X220i

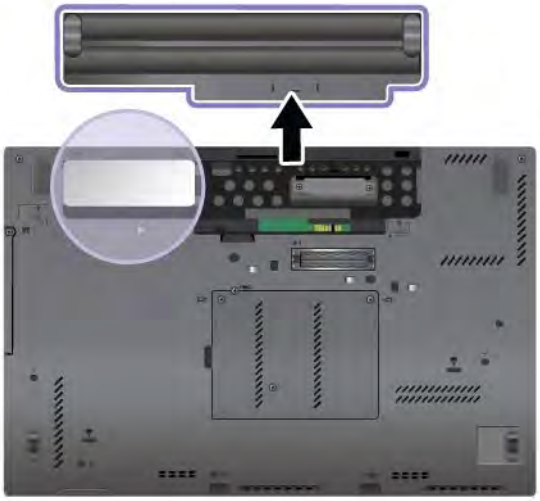

ThinkPad X220 Tablet and X220i Tablet

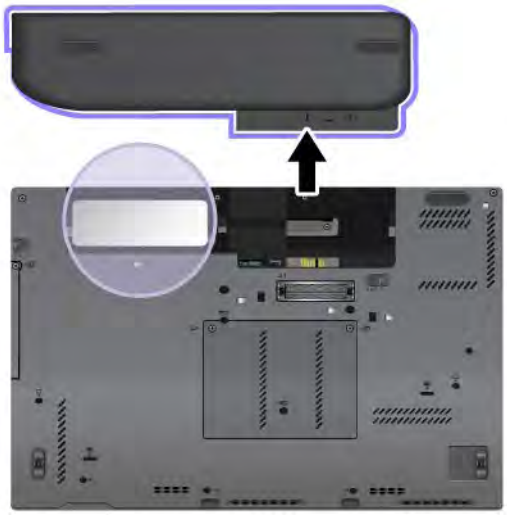

Features

This section provides features for your notebook computer.

ThinkPad X220 and X220i features

Processor

- See the system properties of your computer. You can do this as follows: Click **Start**, right-click **Computer** (in Windows XP, **My Computer**); then from the pull down menu select **Properties**.

Memory

- Double data rate 3 (DDR3) synchronous dynamic random access memory

Storage device

- 2.5-inch (76 mm) solid state drive or 2.5-inch (64 mm) hard disk drive
- mSATA solid state drive (on some models)

Display
The color display uses TFT technology:

- Size: 12.5 inch (317.5 mm)
- Resolution:
  - LCD: 1366-by-768
  - External monitor: Up to 2560-by-1600
- LED backlight
- Brightness control
- ThinkLight

Keyboard

- 89-key, 90-key, or 94-key
- UltraNav (TrackPoint and multi-touch touch pad)
- Fn key function
- ThinkVantage button
- Volume control buttons
- Speaker mute button
- Microphone mute button

Interface

- External monitor connectors
- Combo audio jack (stereo headphone or headset)
- 3 Universal Serial Bus (USB) connectors
- RJ45 Ethernet connector
- ExpressCard slot
- 4-in-1 digital media card reader
- Docking connector

- DisplayPort connector

Optical drive in ThinkPad X220 UltraBase

- DVD drive
- DVD Multi-Burner drive

Wireless features

- Integrated wireless LAN (on some models)
- Integrated *Bluetooth* (on some models)
- Integrated wireless WAN (on some models)
- Integrated WiMAX (on some models)

Security features

- Fingerprint reader (on some models)

ThinkPad X220 Tablet and X220i Tablet features

Processor

- See the system properties of your computer. You can do this as follows: Click **Start**, right-click **Computer** (in Windows XP, **My Computer**); then from the pull down menu select **Properties**.

Memory

- Double data rate 3 (DDR3) synchronous dynamic random access memory

Storage device

- 2.5-inch (76 mm) solid state drive or 2.5-inch (64 mm) hard disk drive
- mSATA solid state drive (on some models)

Display
The color display uses TFT technology:

- Size: 12.5 inch (317.5 mm)
- Resolution:
  - LCD: 1366-by-768
  - External monitor: Up to 2560-by-1600
- LED backlight
- Brightness control

Keyboard

- 89-key, 90-key, or 94-key
- UltraNav (TrackPoint and multi-touch touch pad)
- Fn key function
- ThinkVantage button
- Volume control buttons
- Speaker mute button
- Microphone mute button

Interface

- External monitor connectors
- Combo audio jack (stereo headphone or headset)
- 3 Universal Serial Bus (USB) connectors
- RJ45 Ethernet connector
- ExpressCard slot
- 4-in-1 digital media card reader
- Docking connector
- DisplayPort connector

Optical drive in ThinkPad X220 UltraBase

- DVD drive
- DVD Multi-Burner drive

Wireless features

- Integrated wireless LAN (on some models)
- Integrated *Bluetooth* (on some models)
- Integrated wireless WAN (on some models)
- Integrated WiMAX (on some models)

Security features

- Fingerprint reader (on some models)

Tablet features

- Tablet Digitizer Pen
- Touch panel (on select models)

Specifications

This section provides specifications for your computer.

ThinkPad X220 and X220i specifications

Size

- Width: 305.0 mm (12 inch)
- Depth: 206.5 mm (8.13 inch)
- Height: 19 to 26.6 mm (0.75 inch to 1.05 inch)

Environment:

- Maximum altitude without pressurization: 3048 m (10,000 ft)
- Temperature
  - At altitudes up to 2438 m (8000 ft)
    - Operating: 5.0°C to 35.0°C (41°F to 95°F)
    - Non-operating: 5.0°C to 43.0°C (41°F to 109°F)

  - At altitudes above 2438 m (8000 ft)
    - Maximum temperature when operating under the unpressurized condition: 31.3°C (88°F)

  Note: When you charge the battery pack, its temperature must be at least 10 °C (50 °F).
- Relative humidity:
  - Operating: 8% to 80%
  - Non-operating: 5% to 95%

Heat output

- 65 W (222 Btu/hr) maximum or 90 W (307 Btu/hr) maximum, depending on the model

Power source (ac power adapter)

- Sine-wave input at 50 to 60 Hz
- Input rating of the ac power adapter: 100 to 240 V AC, 50 to 60 Hz

Battery pack

- Lithium-ion (Li-Ion) battery pack

Battery life

- For percentage of remaining battery power, see the Power Manager Battery Gauge in the task bar.
- The Power Manager also displays a green, yellow and red indication. A battery under warranty with a red indication is eligible for a warranty replacement.

ThinkPad X220 Tabet and X220i Tablet specifications

Size

- Width: 305.0 mm (12 inch)
- Depth: 228.7 mm (9 inch)
- Height: 27 to 31.3 mm (1.06 inch to 1.23 inch)

Environment:

- Maximum altitude without pressurization: 3048 m (10,000 ft)
- Temperature
  - At altitudes up to 2438 m (8000 ft)
    - Operating: 5.0°C to 35.0°C (41°F to 95°F)
    - Non-operating: 5.0°C to 43.0°C (41°F to 109°F)

  - At altitudes above 2438 m (8000 ft)
    - Maximum temperature when operating under the unpressurized condition: 31.3°C (88°F)

  Note: When you charge the battery pack, its temperature must be at least 10 °C (50 °F).
- Relative humidity:
  - Operating: 8% to 80%
  - Non-operating: 5% to 95%

Heat output

- 65 W (222 Btu/hr) maximum, or 90 W (307 Btu/hr) maximum, depending on the model

Power source (ac power adapter)

- Sine-wave input at 50 to 60 Hz
- Input rating of the ac power adapter: 100 to 240 V AC, 50 to 60 Hz

Battery pack

- Lithium-ion (Li-Ion) battery pack

Battery life

- For percentage of remaining battery power, see the Power Manager Battery Gauge in the task bar.
- The Power Manager also displays a green, yellow and red indication. A battery under warranty with a red indication is eligible for a warranty replacement.

Operating environment

This section provides information about your computer operating environment.

Environment

- Maximum altitude without pressurization: 3048 m (10,000 ft)
- Temperature
  - At altitudes up to 2438 m (8000 ft) Operating: 5.0°C to 35.0°C (41°F to 95°F) Non-operating: 5.0°C to 43.0°C (41°F to 109°F)
  - At altitudes above 2438 m (8000 ft) Maximum temperature when operating under the unpressurized condition: 31.3°C (88°F)

    Note: When you charge the battery pack, its temperature must be at least 10°C (50°F).
- Relative humidity:
  - Operating: 8% to 80%
  - Non-operating: 5% to 95%

If possible, place your computer in a well-ventilated and dry area without direct exposure to sunshine.

Keep electrical appliances such as an electric fan, radio, high-powered speakers, air conditioner, and microwave oven away from your computer because the strong magnetic fields generated by these appliances can damage the monitor and data on the hard disk drive or solid state drive.

Do not place any beverages on top of or beside the computer or other attached devices. If liquid is spilled on or in the computer or an attached device, a short circuit or other damage might occur.

Do not eat or smoke over your keyboard. Particles that fall into your keyboard can cause damage.

ThinkVantage Technologies and software

Lenovo preinstalls on your PC useful and helpful software applications to help you get started, to stay productive while on the move and to keep you and your computer working. Lenovo offers enhanced security, wireless computing, data-migration and other solutions for your computer.

Following sections provide information about ThinkVantage technologies and other computing solutions, offered by Lenovo.

- “Accessing applications in Windows 7” on page 33
- “Access Connections” on page 35
- “Active Protection System” on page 35
- “Client Security Solution” on page 35
- “Fingerprint Software” on page 35
- “Lenovo ThinkVantage Tools” on page 36
- “Lenovo ThinkVantage Toolbox” on page 36
- “Message Center Plus” on page 36
- “Password Manager” on page 36
- “Power Manager” on page 37
- “Presentation Director” on page 37
- “Product Recovery” on page 37
- “Rescue and Recovery” on page 37
- “System Update” on page 37
- “ThinkVantage GPS” on page 38
- “Lenovo SimpleTap ” on page 38
- “Lenovo ThinkVantage Tablet Shortcut Menu” on page 38

Note: To learn more about ThinkVantage technologies and other computing solutions, offered by Lenovo, go to:
http://www.lenovo.com/support

Accessing applications in Windows 7

If you are using the Windows 7 operating system, you can access applications by following one of the methods below:

- You can get the applications from the Lenovo ThinkVantage Tools.

  Click **Start → All Programs → Lenovo ThinkVantage Tools**. Then depending on the application you want to access, double-click the corresponding icon.

  Note: If an application icon in the Lenovo ThinkVantage Tools application navigation window is dimmed, it indicates that you need to install the application manually. To install the application manually, double-click the application icon. Then, follow the instructions on the screen. When the installation process completes, the application icon will be activated.

  Table 1. Applications on Lenovo ThinkVantage Tools

Application	Icon name
Access Connections™	Internet Connection
Active Protection System	Airbag Protection
Fingerprint Software	Fingerprint Reader
Lenovo ThinkVantage Toolbox	System Health and Diagnostics
Mobile Broadband Activate	3G Mobile Broadband
Password Manager	Password Vault

Table 1. Applications on Lenovo ThinkVantage Tools (continued)

Power Manager	Power Controls
Recovery Media	Factory Recovery Disks
Rescue and Recovery	Enhanced Backup and Restore
System Update	Update and Drivers
ThinkVantage GPS	GPS
Lenovo SimpleTap	Simple Tap
Lenovo ThinkVantage Tablet Shortcut Menu	Tablet Utility

- You can also get the applications from the Control Panel.

  Click **Start** → **Control Panel**. Depending on the application you want to access, click the corresponding section and then click the corresponding green text.

  Note: If you do not find the application you need in Control Panel, open the Lenovo ThinkVantage Tools application navigation window and double-click the dimmed icon to install the application you need. Then, follow the instructions on the screen. When the installation process completes, the application icon will be activated, and you can find the application in Control Panel.

  The sections in Control Panel, the green texts, and the applications are listed in the following table.

Table 2. Applications in Control Panel

Application	Control Panel section	Green text in Control Panel
Access Connections	Network and Internet	Lenovo - Internet Connection
Active Protection System	System and Security Hardware and Sound	Lenovo - Airbag Protection
Communications Utility	Hardware and Sound	Lenovo - Web Conferencing
Fingerprint Software	System and Security Hardware and Sound	Lenovo - Fingerprint Reader or Lenovo - notebook Fingerprint Reader
Lenovo ThinkVantage Toolbox	System and Security	Lenovo - System Health and Diagnostics
Mobile Broadband Activate	Network and Internet	Lenovo - 3G Mobile Broadband
Password Manager	System and Security User Accounts and Family Safety	Lenovo - Password Vault
Power Manager	Hardware and Sound System and Security	Lenovo - Power Controls
Recovery Media	System and Security	Lenovo - Factory Recovery Disks
System Update	System and Security	Lenovo - Update and Drivers
Rescue and Recovery	System and Security	Lenovo - Enhanced Backup and Restore
ThinkVantage GPS	Network and Internet System and Security	Lenovo - GPS

Note: Some applications might not be available in your system.

Access Connections

Access Connections is a connectivity assistant program for creating and managing location profiles. Each location profile stores all the network and Internet configuration settings needed for connecting to a network infrastructure from a specific location such as a home or an office.

By switching between location profiles as you move your computer from place to place, you can quickly and easily connect to a network with no need to reconfigure your settings manually and restart the computer each time.

To open the Access Connections program, do the following:

- For Windows 7: See “Accessing applications in Windows 7” on page 33.
- For Windows Vista® and Windows XP: Click **Start → All Programs → ThinkVantage → Access Connections**.

Active Protection System

The Active Protection System protects your hard disk drive when the shock sensor inside your computer detects a condition that could damage the drive, such as system tilt, excessive vibration, or shock. The hard disk drive is less vulnerable to damage when it is not operating; so the system stops it from spinning, and may also move the read/write heads of the drive to areas that do not contain data. As soon as the shock sensor senses that the environment is stable again (minimal change in system tilt, vibration, or shock), it turns the hard disk drive on.

To open Active Protection System, do the following:

- For Windows 7: See “Accessing applications in Windows 7” on page 33.
- For Windows Vista and Windows XP: Click **Start → All Programs → ThinkVantage → Active Protection System**.

Client Security Solution

The Client Security Solution helps protect your computer and your personal information so that you know that your sensitive data is secure. It can also help manage your passwords, help recover a forgotten password, or help you monitor security settings on your computer and suggest how to enhance your computer security.

These convenient features are made more secure by a built-in security chip, a powerful computer chip dedicated to the security functions of your computer.

To start the Client Security Solution, click **Start → All Programs → ThinkVantage → Client Security Solution**.

For details, refer to the Help for the program.

You can download the latest Client Security Solution at:
http://www.lenovo.com/support

Note: If your computer is a Windows 7 model, Client Security Solution is not preinstalled on it.

Fingerprint Software

If your system comes with a fingerprint reader, the Fingerprint Software program enables you to enroll your fingerprint and associate it with your Windows password. As a result, the fingerprint authentication can replace your password and enable simple and secure user access.

To open the fingerprint software, do the following:

- Windows 7: See “Accessing applications in Windows 7” on page 33.
- For Windows Vista and Windows XP: Click **Start → All Programs → ThinkVantage → ThinkVantage Fingerprint Software**.

Lenovo ThinkVantage Tools

The Lenovo ThinkVantage Tools program helps you work more easily and securely by providing easy access to various technologies, such as:

- Lenovo ThinkVantage Toolbox
- Power Manager
- Rescue and Recovery
- System Update

To access the Lenovo ThinkVantage Tools program, click **Start → All Programs → Lenovo ThinkVantage Tools**.

Note: Lenovo ThinkVantage Tools is only available on computers preinstalled with Windows 7.

Lenovo ThinkVantage Toolbox

The Lenovo ThinkVantage Toolbox is a diagnostic program that works through the Windows operating system. It enables you to view symptoms of computer problems and solutions for them, and includes automatic notification when action is required, computing assistance, and advanced diagnostics and diagnostic history.

For further information about diagnosing problems, see “Diagnosing problems using Lenovo ThinkVantage Toolbox” on page 207.

To open Lenovo ThinkVantage Toolbox, do the following:

- For Windows 7: See “Accessing applications in Windows 7” on page 33.
- For Windows Vista and Windows XP: Click **Start → All Programs → ThinkVantage → Lenovo ThinkVantage Toolbox**.

For additional information about running the Lenovo ThinkVantage Toolbox program, refer to the Lenovo ThinkVantage Toolbox help system.

Message Center Plus

The Message Center Plus displays messages to inform you about helpful software that has been preinstalled on your computer. The software enables you to manage wired and wireless connections, protect your data in the event of a problem and automatically diagnose and resolve potential problems with your computer. The Message Center Plus can also provide messages about new updates available to keep your computer current.

Password Manager

The Password Manager program enables users to manage and remember all their sensitive and easy-to-forget application and Web site login information, such as user IDs, passwords, and other personal information.

To open Password Manager, do the following:

- For Windows 7: See “Accessing applications in Windows 7” on page 33.
- For Windows Vista and Windows XP: Click **Start → All Programs → ThinkVantage → Password Manager**.

Power Manager

The Power Manager program provides convenient, flexible, and complete power management for your computer. By using the Power Manager program, you can adjust your power settings to give you the best balance between performance and power saving.

To open Power Manager, do the following:

- For Windows 7: See “Accessing applications in Windows 7” on page 33.
- For Windows Vista and Windows XP: Click **Start → All Programs → ThinkVantage → Power Manager**.

Product Recovery

This program enables you to create recovery media to restore the contents of the system drive or hard disk drive to the same state as when the computer was originally shipped from the factory.

For information about how to open and use this program, refer to “Creating and using recovery media” on page 107.

Presentation Director

Presentation Director is a display configuration utility that enables you to give presentations conveniently. It also enables you to create and manage the display schemes. However, by default, Presentation Director has some predefined presentation schemes. You can apply them to your presentation with no need to set up a new scheme. To apply a presentation scheme, you can also use the Fn + F7 key combination.

To open Presentation Director, click **Start → All Programs → ThinkVantage → Presentation Director**.

Note: If your computer is a Windows 7 model, Presentation Director is not supported because the Windows 7 operating system handles the external displays instead.

Rescue and Recovery

The Rescue and Recovery program is a one button recovery and restore solution that includes a set of self-recovery tools to help you diagnose computer problems, get help, and recover from system crashes, even if you cannot start the Windows operating system.

- For Windows 7: See “Accessing applications in Windows 7” on page 33.
- For Windows Vista and Windows XP: Click **Start → All Programs → ThinkVantage → Rescue and Recovery**.

System Update

The System Update program helps you keep the software on your computer up-to-date by downloading and installing software packages (ThinkVantage applications, device drivers, UEFI BIOS updates, and other third party applications). Some examples of software that you should keep updated are programs provided by Lenovo, such as the Rescue and Recovery program.

To open the System Update, do the following:

- For Windows 7: See “Accessing applications in Windows 7” on page 33.
- For Windows Vista and Windows XP: Click **Start → All Programs → ThinkVantage → System Update**.

ThinkVantage GPS

If the PCI Express Mini Card installed in your computer supports GPS, your computer can receive signals from GPS satellites and determine its location. If your computer is connected to the Internet, you can find your location on a real-time map provided by Google Maps or Microsoft Bing™ Maps.

To open ThinkVantage GPS, do the following:

- For Windows 7: See “Accessing applications in Windows 7” on page 33.
- For Windows Vista and Windows XP: Click **Start** → **All Programs** → **ThinkVantage** → **ThinkVantage GPS**.

For receiving the signals from GPS satellite, keep the following best usage guidelines in mind:

- Keep your notebook away from your body.
- GPS antenna is located under the LCD screen.
- Ensure that you place your notebook away from concrete or brick walls that may weaken satellite signals.
- Best reception will be available near windows and other locations where cellular phone reception is the strongest.

The GPS satellite signals may not available at following area:

- Inside of tunnel or basement
- Inside of building or beside of building
- Between tall building
- Near the high-voltage electric cables

Note: For ThinkPad X220 Tablet and X220i Tablet, place your notebook on a flat surface and keep the lid open at a 105 degree angle (notebook mode) .

Lenovo SimpleTap

Lenovo SimpleTap provides you a quick and customizable way to access your computer basic settings and some personalized features.

To open the Lenovo SimpleTap, do the following:

- For Windows 7: See “Accessing applications in Windows 7” on page 33.
- For Windows Vista: Click **Start** → **All Programs** → **ThinkVantage** → **Lenovo SimpleTap**.

Lenovo ThinkVantage Tablet Shortcut Menu

If your notebook is a tablet model, Lenovo ThinkVantage Tablet Shortcut Menu is available in your system.

The Tablet Shortcut Menu is a utility for your ThinkPad utility programs such as Access Connections, Presentation Director and EasyEject Utility, for launching custom defined applications, for changing system settings and for changing the focus from one window to another window.

You can use this utility to enable a function that makes your computer detect the state of the display (notebook mode or tablet mode) and change the screen orientation automatically to suit your preference.

To open the Lenovo ThinkVantage Tablet Shortcut Menu, do the following:

- For Windows 7: See “Accessing applications in Windows 7” on page 33.
- For Windows Vista : Click **Start** → **All Programs** → **ThinkVantage** → **ThinkPad Tablet Shortcut Menu**.

Chapter 2. Using your computer

Your computer is powerful and is loaded with features and applications. Use it to accomplish anything, any day, any time.

This chapter contains the following topics:

- “Register your computer” on page 39
- “Frequently asked questions” on page 39
- “Special keys and buttons” on page 46
- “Using the UltraNav pointing device” on page 54
- “Power management” on page 58
- “Connecting to the network” on page 62
- “Using a projector or external display ” on page 70
- “Using audio features” on page 77
- “Using an integrated camera” on page 78
- “Using the ThinkLight feature” on page 79
- “Using the media card reader” on page 79

Register your computer

When you register your computer, information is entered into a database, which enables Lenovo to contact you in case of a recall or other severe problem. In addition, some locations offer extended privileges and services to registered users.

When you register your computer with Lenovo, you will also receive the following benefits:

- Quicker service when you call Lenovo for help
- Automatic notification of free software and special promotional offers

Note: When you are ready to register by modem, you will need a phone connection to your computer and access to the World Wide Web.

To register your computer with Lenovo, go to this Web site:
http://www.lenovo.com/register

Then follow the instructions on the screen.

Frequently asked questions

Here are a few tips that will help you optimize the use of ThinkPad notebook.

To ensure that you receive the best performance from your computer, browse the following Web page to find information such as aids for troubleshooting and answers to frequently asked questions:
http://www.lenovo.com/support/faq.

Can I get my user guide in another language?

- To download the user guide in another language, go to: http://www.lenovo.com/support. Then follow the instructions on the screen.

© Copyright Lenovo 2011

On the go and need to use battery power more effectively?

- To conserve power, or to suspend operation without exiting applications or saving files, see the explanation about “power-saving modes” on page 59.
- To achieve the best balance between performance and power saving, create and apply power plans (in Windows XP, power schemes) by use of Power Manager.
- If your computer will be turned off for an extended period of time, you can prevent battery power from draining by removing the battery. Look for more information about using the battery in “Power management” on page 58.

Concerned about security or need to securely dispose of data stored on your hard disk or solid state drive?

- Study the Chapter 4 “Security” on page 89 section to find out how you can protect your computer from theft and unauthorized use.
- The Client Security Solution preinstalled on your computer performs many of the security tasks that help protect it. If the setup wizard runs, to keep your secure, be sure to set up the Client Security Solution.

  Note: If your computer is a Windows 7 model, Client Security Solution is not preinstalled on it.
- Before you dispose of the data on the hard disk drive or the solid state drive, be sure to read “Notice on deleting data from your hard disk or solid state drive” on page 105.

Getting connected in different locations is a challenge?

- To troubleshoot a wireless networking issue, go to:
  http://www.lenovo.com/support/faq
- Take advantage of the networking features by use of Access Connections.
- To learn more about using the wireless features of your computer, refer to “Wireless connections” on page 62.
- To travel more confidently, be sure to check the tips in “Traveling with your computer” on page 86.
- Press Fn+F5, or use the wireless radio switch to enable or disable the wireless features.

Need to give presentations or attach an external monitor often?

- Use Presentation Director to set up a presentation.

  Note: If your computer is a Windows 7 model, it does not support Presentation Director, however the Fn+F7 key combination may still be used to switch display output location.
- Make sure that you follow the procedure for “Attaching an external monitor” on page 71.
- With the Extend desktop function, you can display output on both the computer display and the external monitor.

Need to attach or replace a device?

- See Chapter 6 “Replacing devices” on page 115 for more information about replacing the devices of your computer.
- See Chapter 7 “Enhancing your computer” on page 149 for more information about enhancing the features of your computer.

You've been using your computer for some time already, and it is getting slower?

- Follow the “General tips for preventing problems” on page 201.
- You can diagnose problems yourself by using the preinstalled software.

- Also Recovery tool is provided on your computer hard disk or solid state drive. For more information, see Chapter 5 “Recovery overview” on page 107.

Print the following sections and keep them with your computer in case you are unable to access this online help when necessary.

- “Installing a new operating system” on page 173
- “Computer stops responding” on page 208
- “Power problems” on page 230

Tablet mode

ThinkPad X220 Tablet or X220i Tablet notebook can be used in tablet mode, taking advantage of the features and benefits of a tablet PC.

Using the tablet mode

In the tablet mode, you can use your computer in a creative and intuitive way by jotting down notes and illustrations with the Tablet Digitizer Pen and then storing them digitally.

To use your computer in the tablet mode, do as follows:

1. Open the computer display slowly, holding the upper left and right sides of the display with both hands. Your computer is now in the **notebook mode**.

2. Open the display by at least 45 degrees, preferably by 90 degrees. Grasp the center of one side of the computer display with one hand while holding the keyboard bezel with the other hand; then rotate the display slowly clockwise until the back of the display is facing the keyboard. Your computer is now in the **picture frame mode**.

   Note: While rotating the display, do not press the upper edge of either side of the display.

3. Close the computer display slowly, holding the upper left and right sides with both hands.

   Note: Make sure that the display is rotated at 180 degrees, so that the back of the display faces the keyboard.

4. Press the center latch down to lock the display.

   Note: Do not rotate, twist, or bend the center latch of the display.

   Your computer is now in the **tablet mode**.

To return your computer to the notebook mode, do as follows:

1. Open the display by at least 45 degrees, preferably by 90 degrees.
2. Follow the direction shown by the display swivel indicator and rotate the display slowly (figure below shows counter-clockwise rotation as an example) until the front of the display is facing the keyboard.

Your computer is now in the **notebook mode**.

Tips on using your computer in the tablet mode

- To close the computer display, first make sure that the display either faces the keyboard or is positioned at 180 degrees to the keyboard, so that the back of the display faces the keyboard.
- Do not pick up or hold the computer by the display only.
- Do not hit, vibrate, or bump the computer display.
- To allow free ventilation, do not place any obstacle, such as a thick-piled carpet or a soft cushion, in front of the fan.
- When you use the computer in the picture frame mode, hold the display with one hand and use the Tablet Digitizer Pen.
- If you hold the computer with one hand while using it in the tablet mode, do not expose it to excessive vibration, shock, or rotation.
- When using computer outdoors protect against exposure to rain or moisture.
- If you put your computer in a carrying case, put it into notebook mode and close the display.

Using the Tablet Digitizer Pen

The Tablet Digitizer Pen and its accessories are shipped in a separate box within the ThinkPad shipping box. You can use the pen to control your computer just as you would with a mouse or keyboard.

Note: This pen is not waterproof. Take care not to soak it or dip it in water.

You can store the pen in the slot on the right side of the ThinkPad Notebook. Press it gently into the slot until you hear a click.

To remove the pen from its slot, press it gently into the slot 1 to release it; then pull it out 2.

Note: The pen contains pressure sensors. Do not push the tip of the pen for an extended period of time. Do not subject the pen to shock or vibration.

The Tablet Digitizer Pen consists of a tip 2, a click button 3, and an eraser tip 4. Hold the pen and point the tip at the display to move the cursor 1.

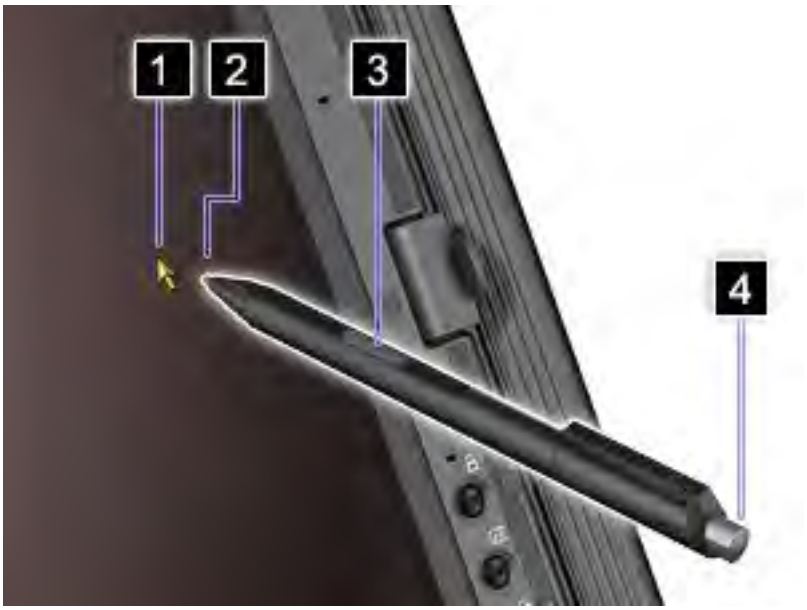

To make a selection (single click), tap the display once with the pen. To double-click, tap twice without pausing. To do a right-click, tap the display once and then hold the tip of the pen on the display; the right-click icon appears.

Pressing the click button 3 is the same as a right-click. The eraser tip 4 functions like an eraser in applications that support this function.

Using the touch panel

Some models have the touch panel feature. This feature makes interaction with your computer even more natural, because you can use fingers instead of a pen for navigation on the go.

For a single click, tap the display once with your finger. For a double click, tap the display twice without pausing. For a right click, tap the display once and then hold your finger on the display until a circular symbol appears. When you take your finger off the display, the right-click menu will open.

Using the multitouch panel

On a model that has the multitouch panel feature, the touch panel supports multitouch, with which you can zoom in, zoom out, scroll, or rotate on the screen with your two fingers while browsing the Internet or reading or editing a document.

The multitouch panel supports the capacitive touch. Even the slightest contact of your electron-rich finger with the screen's glass is enough to activate the capacitive sensing system. This function does not work with inanimate objects, fingernails, gloved fingers. Advanced palm-rejection technology helps to prevent inadvertent contact with a pen or a finger, which could disrupt finger input.

Tips on using the touch panel

- The touch panel is a glass panel covered with a plastic film. For input you can use either your finger or the Tablet Digitizer Pen shipped with your computer. Do not use any pen other than the specified one, or any metallic object, because to do so might damage the touch panel or cause it to malfunction.
- If you put your computer in a carrying case, put it into notebook mode and close the display. Do not carry your computer in tablet mode.
- If you use both your finger (or two fingers) and the Tablet Digitizer Pen simultaneously for input to the screen, only data entered by use of the Digitizer Pen will be processed.
- With the touch panel, gradually a discrepancy may start to appear between the point you touch with your finger (or two fingers) during the finger point, and its actual position on the screen. To avoid this, regularly correct the accuracy of the finger input by use of the touch panel Settings Utility.
- If your computer is the multitouch model, the touch panel of your computer supports multitouch with which you can:
  - Pinch two fingers together or apart to zoom in or out on a document.
  - Scroll window contents by moving two fingers up and down, left and right.
  - Touch two points on a digital photo and twist to rotate it just like a real photo.

Cleaning the touch panel display

1. To remove fingerprints, etc., from the touch panel display, use a dry, soft, lint-free cloth or a piece of absorbent cotton. Do not apply solvents to the cloth.
2. Gently wipe foreign particles and dust from the touch panel with one side of the cloth.
3. Wipe smudges or fingerprints with the other side of the cloth, or with a clean cloth.
4. After using the cloth, wash it with a neutral detergent.

Using the Tablet buttons

On the display bezel near the screen is a row of buttons with which you can control your computer in the tablet mode, without the use of the keyboard.

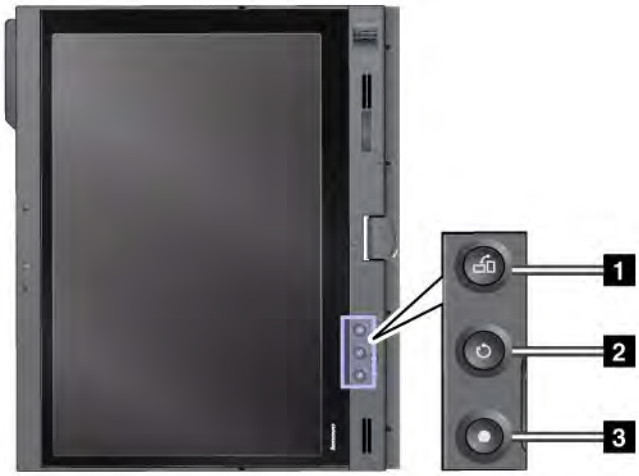

1 Press the **Screen Rotation button** button to rotate the screen clockwise.

2 The **Secure Attention Sequence button** functions the same as the Ctrl+Alt+Del key combination.

3 Press the **power button** button to turn the computer on or off.

Using the Tablet Shortcut Menu

Tablet Shortcut Menu is a software tool bar that is optimized for use when your computer is in the tablet mode. From this menu you can adjust certain system settings and start the ThinkPad utility programs, such as Access Connections and Presentation Director. The menu also provides functions that are useful in the tablet mode, such as changing the screen orientation automatically for different positions of the computer, disabling the Beam Forming feature automatically in tablet mode, or resuming the system from standby when the Tablet Digitizer Pen is removed from its slot.

To start the Tablet Shortcut Menu, press the “Using the Tablet buttons” on page 45 on the computer display bezel, using either the Tablet Digitizer Pen or your finger. The main panel appears on the screen.

There is another way to open the main panel.

For Windows 7: Click **Start** → **All Programs** → **Lenovo ThinkVantage Tools** → **Tablet Utility**.

For Windows Vista and Windows XP: Click **Start** → **All Programs** → **ThinkVantage** → **Tablet Shortcut Menu**.

For details, refer to the Help in the Tablet Shortcut Menu.

Special keys and buttons

Your computer has several special keys and buttons.

ThinkVantage button

The blue ThinkVantage button can help you in many situations when your computer is working normally, and even when it is not.

You can also use the ThinkVantage button to interrupt the startup sequence of your computer and start the Rescue and Recovery workspace, which runs independently of the Windows operating system and is hidden from it. If Windows is not running properly, you may need to do the following:

- Get the current system information.
- Rescue a file from your Windows environment or restore back-up files, provided you have made backups by use of the Rescue and Recovery program.
- Configure your computer or start the ThinkPad Setup.

All this can be achieved from the Rescue and Recovery workspace. Turn on the computer; then, while the "To interrupt normal startup, press the blue ThinkVantage button" message is displayed at the lower-left of the screen, press the ThinkVantage button. The Rescue and Recovery screen opens.

Numeric keypad

The keyboard has keys that, when enabled, work as a 10-key numeric keypad.

To enable or disable the numeric keypad, press and hold **Shift** or **Fn** and then press **NmLk** (**ScrLk**).

Note: The next drawing shows the locations of the keys that serve as the 10-key numeric keypad. The locations of these keys are the same on every keyboard, though for computers using different languages, different characters are printed on the keytops.

If the numeric keypad is enabled, press and hold **Shift** to use the cursor-control and screen-control keys temporarily.

Note: The functions of the cursor- and screen-control keys are not printed on the keys.

Function key combinations

By setting the function keys, you can change operational features instantly. To use this function, press and hold the Fn key 1; then press one of the function keys 2.

Power conservation

- **Fn+F3**

  Select a power plan (in Windows XP, power scheme) that has been created by Power Manager, or adjust the power level by using the slider control. When you press this combination of buttons, a panel for selecting a power plan (in Windows XP, power scheme) or adjusting the power level appears.

  Note: If you have logged on with an administrator user ID in Windows XP, and you press Fn+F3, the panel for selecting a power scheme appears. If you have logged on with another user ID in Windows XP, and you press Fn+F3, the panel does not appear.

- **Fn+F4**

  Put your computer in sleep (standby) mode. To return to normal operation, press the Fn key only, without pressing a function key.

  Note: If you want to use the combination to put the computer into hibernation mode or do-nothing mode (in Windows XP, shut the computer down or show the panel for turning off the computer), change the settings in Power Manager.

- **Fn+F12**

  Put your computer in hibernation mode. To return to normal operation, press the power button for less than four seconds.

  Notes:

  – Though the screen fades out immediately after Fn+F12 are pressed, the computer does not enter the hibernation mode immediately. Do not move the system until the Status indicators stops blinking. Moving the computer when it is entering hibernation may cause corruption of the hard drive.

– To use Fn+F3, Fn+F4, and Fn+F12 key combinations, you must have the ThinkPad PM device driver installed on your computer.

For information on the power management function, refer to “Power management” on page 58.

Applying a presentation scheme

- **Fn+F7**

  Apply a presentation scheme directly, with no need to start Presentation Director.

  To disable this function and use the Fn+F7 key combination for switching a display output location, start Presentation Director, and change the settings.

  Click **Start → All Programs → ThinkVantage → Presentation Director**.

  For information on applying a presentation scheme, refer to “Presentation Director” on page 37.

  Note: If your computer is a Windows 7 model, it does not support presentation schemes, however the Fn+F7 key combination may still be used to switch display output location.

Switching a display output location

- **Fn+F7**

  For Windows 7:

  Switch between the computer display and an external monitor. Windows will show these display options:

  – Computer display only (LCD)
  – Computer display and external monitor (same image)
  – Computer display and external monitor (extended desktop function)
  – External monitor only

  Note: To switch between the computer display and an external monitor, the Win+P key combination is also available.

  For Windows Vista and Windows XP:

  Switch between the computer display and an external monitor. If an external monitor is attached, computer output is displayed in the following three patterns by turns:

  – External monitor (CRT display)
  – Computer display and external monitor (LCD + CRT display)
  – Computer display

  Notes:

  – This function is not supported if different desktop images are displayed on the computer display and the external monitor (the Extend desktop function).
  – This function does not work while a DVD movie or a video clip is playing.

  To enable this function, start Presentation Director, and change the settings.

  Note: Multiple users can log on to a single operating system by using different user IDs. Each user needs to do the following:

  Click **Start → All Programs → ThinkVantage → Presentation Director**, and change the Fn+F7 Settings.

Enabling or disabling the wireless features

- **Fn+F5**

  Enable or disable the built-in wireless networking features. If you press Fn+F5, a list of wireless features is displayed. You can quickly change the power state of each feature in the list.

Notes: If you want to use Fn+F5 to enable or disable the wireless features, the following device drivers must be installed on your computer beforehand:

- Power Management driver
- OnScreen Display Utility
- Wireless device drivers

For information on the wireless features, refer to “Wireless connections” on page 62.

Launching the camera and audio settings

- **Fn+F6**

  If you press Fn+F6, the camera and audio settings window is opened and the camera preview is turned on.

  From this window, you can change the camera and audio settings.

  Note: The Camera settings area only appears if your computer has an integrated camera. For more information, see “Using an integrated camera” on page 78.

Other functions

- **Fn+PgUp**: Turn the ThinkLight on. To turn it off, press Fn+PgUp again.

  Note: This function is supported only on the ThinkPad notebooks that have the ThinkLight. The on or off status of the ThinkLight is shown on the screen for a few seconds when you press Fn+PgUp.
- **Fn+Home**: The computer display becomes brighter.

  The purpose of this method is to change the brightness level temporarily. On Windows Vista, the default brightness level is loaded after sleep (standby), hibernation, reboot, or detaching or attaching an ac power adapter. To change the default brightness level, change the settings of the Power Option in the Control Panel or use the Power Manager.
- **Fn+End**: The computer display becomes dimmer.

  The purpose of this method is to change the brightness level temporarily. On Windows Vista, the default brightness level is loaded after sleep (standby), hibernation, reboot, or detaching or attaching an ac power adapter. To change the default brightness level, change the settings of the Power Option in the Control Panel or use the Power Manager.
- **Fn+Spacebar**: Enable the FullScreen Magnifier function.
- **Fn+F2**: Lock your computer.
- **Fn+F8**: Change the settings of the UltraNav pointing device.
- **Fn+PrtSc**: Have the same function as the SysRq key.
- **Fn+ScrLk**: Enable or disable the numeric keypad. The indicator of numeric lock is displayed on the screen.
- **Fn+Pause**: Have the same function as the Break key.
- **Fn+cursor keys**: These key combinations are for use with Windows Media Player. They have the following functions:
  - Fn + down arrow key: Play or Pause
  - Fn + up arrow key: Stop
  - Fn + right arrow key: Next Track
  - Fn + left arrow key: Previous Track

Volume and mute buttons

You can adjust the sound level of the built-in speakers by using the following three buttons:

If you mute the sound and then turn off your computer, the sound will remain muted when you turn on your computer again. To turn on the sound, press the plus (**+**) or minus (**-**) button.

Setting the volume

Each device has volume controls, which you can set.

To open the window for adjusting the output volume or the recording volume, do the following:

For Windows 7 and Windows Vista:

1. Click **Start** → **Control Panel** → **Hardware and Sound** → **Sound**. The Sound window appears.
2. Click the **Playback** tab or **Recording** tab, and then click a device, which you want to customize.
3. Click the **Properties** button.
4. Click the **Levels** tab, and then change the volume by moving the slider.

For Windows XP:

1. Click **Start** → **Control Panel** → **Sounds, Speech, and Audio Devices** → **Sounds and Audio Device**. The Sounds and Audio Device Properties window appears.
2. Click the **Audio** tab, and then click the **Volume** button in Sound Playback or Sound Recording.

Notes:

- You can also get access to the desktop volume control by using the volume icon in the task bar at the lower right of the screen. To open the Volume Control window, click the volume icon. To control the volume, move the volume control slider up or down. To turn off the sound, select **Mute speakers** (in Windows Vista and Windows XP, **Mute**).
- The names of windows or fields are slightly different depending on the operating system you use.

- For details about controlling volume, refer to your Windows online help.

Setting the microphone mute button in Windows 7 and Windows Vista

By default, you can toggle all of your recording devices between the mute state and the un-mute state by pressing the microphone mute button.

If you want to toggle one of the recording devices between the mute state and the un-mute state, do the following:

1. Press Fn+F6. The Communications settings window opens.
2. Click the **Manage Settings** button. The Communications Utility window opens.
3. On the **VoIP Call Settings** tab, click **Microphone mute button settings**. The Setting for Microphone Mute window opens.
4. Select **Only the recording device selected below:**. Then select the recording device from the drop-down list box.
5. Click **OK**.

Windows key and Application key

The following two keys are on your computer keyboard:

1 Windows key

If you press this key, the Start menu of Windows is displayed or hidden.

If you press this key and another key at the same time, the System Properties window or the Computer (in Windows XP, My Computer) window is displayed. For details, refer to the Help in Windows operating system.

2 Application key

To display the shortcut menu for an object, select the object on the desktop or within an application and then press this key.

Using the UltraNav pointing device

Your computer may come with the UltraNav pointing device. The UltraNav consists of the TrackPoint and the touch pad, each of which is itself a pointing device with both basic and extended functions. You can configure both devices by choosing the settings you prefer as follows:

- **Set both the TrackPoint and the touch pad as pointing devices.**

  This setting enables the use of all the basic and extended functions of the TrackPoint and the touch pad.
- **Set the TrackPoint as the main pointing device and the touch pad for extended functions only.**

  This setting enables the use of all basic and extended functions with the TrackPoint while limiting the use of the touch pad to scrolling, tap zones, and slow-motion pointer functions.
- **Set the touch pad as the main pointing device and the TrackPoint for the extended functions only.**

  This setting enables the use of all basic and extended functions with the touch pad while limiting the use of the TrackPoint to scrolling and Magnifying Glass functions.
- **Set the TrackPoint as the main pointing device, and disable the touch pad.**
- **Set the touch pad as the main pointing device, and disable the TrackPoint.**

Changing the UltraNav settings

You can change your settings of UltraNav in the **UltraNav** tab of the Mouse Properties window. To open it, use one of the following methods:

- Press Fn+F8, and the UltraNav Device Settings window is displayed. In this window click **Manage Settings**. A mouse properties window is displayed. Click the **UltraNav** tab.
- Use the Start menu of your computer as follows:
  - For Windows 7 and Windows Vista: Click **Start → Control Panel → Hardware and Sound → Mouse → UltraNav** tab.
  - For Windows XP: Click **Start → Control Panel → Printers and Other Hardware → Mouse → UltraNav** tab.

You can also change the UltraNav settings by clicking the **UltraNav** icon on the system tray. To display the UltraNav icon on the system tray, see “Adding the UltraNav icon to the system tray” on page 57.

Using the TrackPoint pointing device

The TrackPoint pointing device consists of a pointing stick (1) on the keyboard and three click buttons at the bottom of the keyboard. To move the pointer (5) on the screen, you apply pressure to the nonslip cap on the pointing stick in any direction parallel to the keyboard; the pointing stick itself does not move. The speed at which the pointer moves depends on the pressure you apply to the pointing stick. The functions of the left (4) and right (2) click buttons correspond to those of the left and right mouse buttons on a conventional mouse. The TrackPoint center button (3), called the scroll bar, enables you to scroll Web pages or documents in any direction with no need to use the graphic scroll bars on the side of the window.

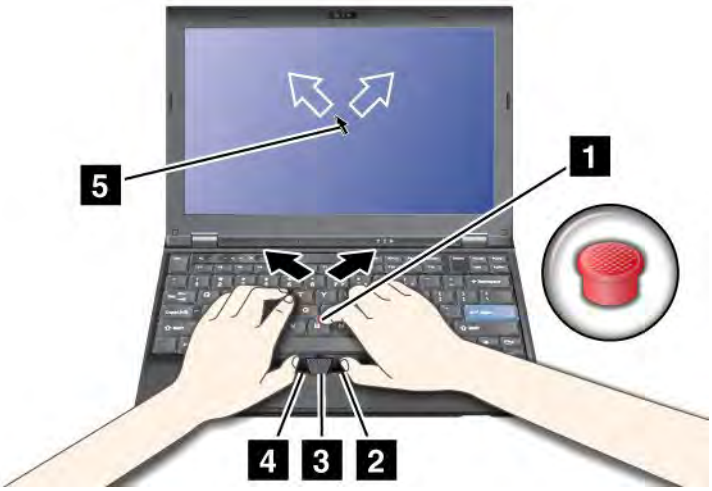

If you are not familiar with the TrackPoint, these instructions will help you get started:

1. Place your hands in the typing position, and press gently with either index finger on the pointing stick in the direction in which you want the pointer to move.

   To move the pointer, press the pointing stick away from you to move it up, toward you to move it down, to one side or the other to move it sideways.

   Note: The pointer might drift. This is not a defect. Stop using the TrackPoint for a few seconds; the pointer will stop moving.
2. To select and drag as required by your software, press the left or right click button with either thumb and move the TrackPoint pointing stick.

   By enabling Press-to-Select, you can make the TrackPoint pointing stick function the same as the left or right click button.

Customizing the TrackPoint

You can customize the TrackPoint pointing device and its buttons as follows:

- Switch the functions of the left and right buttons.
- Change the sensitivity of the TrackPoint.
- Enable the Press-to-Select function.
- Enable the Magnifying Glass.
- Enable the TrackPoint scrolling function.
- Enable the TrackPoint Scrolling Tips.

To customize the TrackPoint, do as follows:

1. Press Fn+F8. A panel for UltraNav Device Settings pops up.
2. Click **Manage Settings** to open the Mouse properties window.
3. Click the **UltraNav** tab. Under TrackPoint, proceed to changing the settings.

For details, refer to the Help in the Utility.

Changing the cap

The cap **1** on the end of the TrackPoint pointing stick is removable. You can replace it as shown in the drawing.

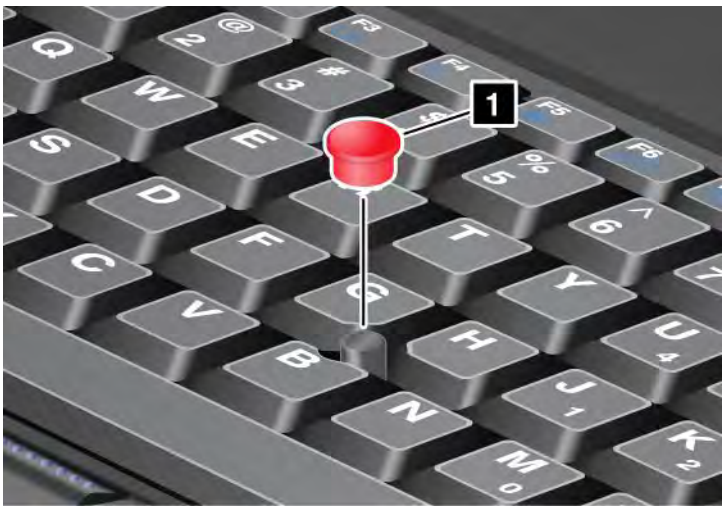

Note: If you replace the keyboard, a new keyboard is shipped with the default cap. If you wish, you can keep the cap from your old keyboard and use it on the new one.

Using the touch pad

The touch pad is below the TrackPoint buttons at the bottom of the keyboard. To move the pointer 2 on the screen, slide your fingertip over the pad in the direction in which you want the pointer to move. The left and right bottom of the pad work as click buttons. The functions correspond to those of the left and right mouse buttons on a conventional mouse.

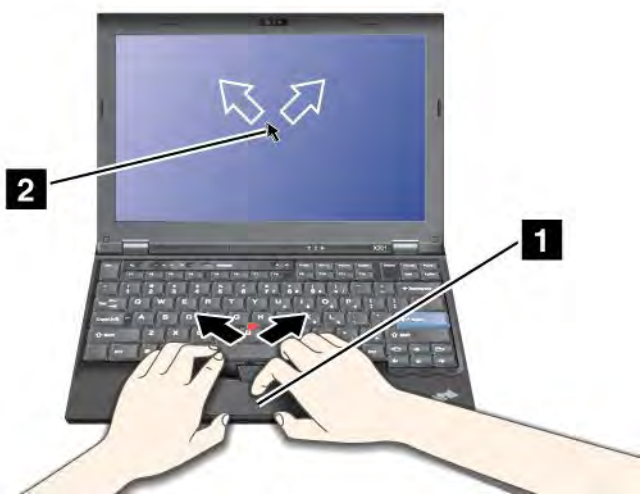

Using the multi-touch touch pad

The touch pad of your computer supports multi-touch with which you can zoom in, zoom out, scroll or rotate on the screen while browsing the Internet or reading or editing a document.

For details, refer to the Help in the UltraNav.

Customizing the touch pad

To customize the touch pad, do as follows:

1. Press Fn+F8. A panel for UltraNav Device Settings pops up.
2. Click **Manage Settings** to open the Mouse properties window.

3. Click the **UltraNav** tab and proceed to customizing the touch pad.

For details, refer to the Help in the Utility.

Behavior of the UltraNav and an external mouse

By default, the TrackPoint and the touch pad are set to **Enabled**.

Note: If you want to attach an external mouse to a USB connector, select “Disabled.”

Disabling the TrackPoint or the touch pad

If you want to disable the TrackPoint or the touch pad, do either of the following:

- **Use the Fn+F8 key combination:**
  1. Press Fn+F8. A panel for UltraNav Device Settings pops up.
  2. To disable the TrackPoint, select **Enable touch pad only (disable TrackPoint)**.
     To disable the touch pad, select **Enable TrackPoint only (disable touch pad)**.
  3. Click **Close**.
- **Configure settings in UltraNav properties window:**

  For Windows 7 and Windows Vista
  1. Click **Start** → **Control Panel** → **Hardware and Sound** → **Mouse**.
  2. Click **UltraNav** tab.
  3. To disable the TrackPoint, clear the check box for **Enable TrackPoint**.
     To disable the touch pad, clear the check box for **Enable touch pad**.
  4. Click **OK**.

  For Windows XP
  1. Click **Start** → **Control Panel** → **Printers and Other Hardware** → **Mouse**.
  2. Click **UltraNav** tab.
  3. To disable the TrackPoint, clear the check box for **Enable TrackPoint**.
     To disable the touch pad, clear the check box for **Enable touch pad**.
  4. Click **OK**.

Note: You can also open the UltraNav properties window by clicking the **UltraNav** icon in the task bar. For details, refer to the instructions in “Adding the UltraNav icon to the system tray” on page 57.

Adding the UltraNav icon to the system tray

For easy access to the UltraNav properties, you can add the **UltraNav** icon on the system tray.

To enable the display of the **UltraNav** icon on the system tray, do as follows:

1. Press Fn+F8. A panel headed UltraNav Device Settings pops up.
2. Click **Manage Settings** to open the Mouse properties window.
3. Click the **UltraNav** tab.
4. Select the check box for **Show UltraNav icon on the system tray**.
5. Click **OK** or **Apply**.
6. If your computer is a Windows 7 model, click **Show hidden icons** in the task bar. The UltraNav icon is displayed. To add it to the task bar permanently, click **Customize** and proceed to customize the settings.

You can now change the properties of UltraNav by clicking the UltraNav icon on the system tray.

Power management

When you need to use your computer away from electrical outlets, you depend on battery power to keep your computer running. Different computer components consume power at different rates. The more you use the power-intensive components, the faster you consume battery power.

Do more, save more and spend more time unplugged with ThinkPad batteries. Mobility has revolutionized business by allowing you to take your work where ever you go. With ThinkPad batteries, you will be able to work longer without being tied to an electrical outlet.

Checking battery status

The Power Manager Battery Gauge in the task tray displays the percentage of battery power remaining.

The rate at which you use battery power will determine how long you can use the battery of your computer between charges. Because each computer user has different habits and needs, it is difficult to predict how long a battery charge will last. There are two main factors:

- How much energy is stored in the battery when you begin to work.
- The way you use your computer: how often you access the hard disk drive or the solid state drive, how bright you make the computer display.

Using the ac power adapter

The power to run your computer can come either from the lithium-ion (Li-ion) battery pack provided with it, or from ac power through the ac power adapter. While you use ac power, the battery charges automatically.

The ac power adapter that comes with your computer has two basic components:

1. The transformer pack that converts ac power adapter for use with the computer.
2. The power cord that plugs into the AC outlet and into the transformer pack.

Attention: Using an improper power cord could cause severe damage to your computer.

To use the ac power adapter, do the following. Be sure to take these steps in the order in which they are given here.

1. Connect the ac power adapter to the power jack of the computer.
2. Connect the power cord to the transformer pack.
3. Plug the power cord into an electrical outlet.

You can check the status of your battery at any time by looking at the battery meter at the bottom of your display.

Notes:

- When the ac power adapter is not in use, disconnect it from the electrical outlet.
- Do not bind the power cord tightly around the ac power transformer pack when it is connected to the transformer.
- You can charge the battery when the ac power adapter is connected to the computer and the battery is installed. You need to charge it in any of the following conditions:
  - When you purchase a new battery.
  - If the battery status indicator starts blinking.

– If the battery has not been used for a long time.

Before you charge the battery, make sure that its temperature is at least 10°C (50°F).

Charging the battery

When you check battery status and find that the percentage of power remaining is low or when the power alarm alerts you that remaining power is low, you need to charge your battery or replace it with a charged battery.

If an ac outlet is convenient, plug the ac power adapter into it, and then insert the jack into the computer. The battery will charge in about 3 to 6 hours. This is affected by the battery size and the physical environment. The battery status indicator will let you know that the battery is charging, and will also notify you when the battery is fully charged.

Note: To increase the life of the battery, the computer does not start recharging the battery if the remaining power is greater than 95%.

Maximizing battery life

To maximize the life of the battery, do the following:

- Use the battery until the charge is completely depleted-until the battery status indicator starts blinking orange.
- Recharge the battery completely before using it. The battery is fully charged if the battery indicator shows green when the ac power adapter is plugged in.
- For a new battery or a battery that you have not used recently, do one of the following:
  1. Recharge the battery completely before using it. The battery is fully charged when the ac power adapter is plugged in and the battery indicator is green.
  2. Use the battery until the charge is completely depleted-until the battery status indicator starts blinking orange.
- Always use power management features such as power modes, screen blank, sleep (standby), and hibernation.

Managing your battery power

With Power Manager, you can adjust your power settings to give you the best balance between performance and power saving.

To start the utility program, do as follows:

- For Windows 7: See “Accessing applications in Windows 7” on page 33.
- For Windows Vista and Windows XP: Click **Start** → **All Programs** → **ThinkVantage** → **Power Manager**.

For more information about the Power Manager program, refer to the on-line help of the program.

Power-saving modes

There are several modes that you can use at any time to conserve power. This section introduces each mode and gives tips on the effective use of the battery power.

Introducing the power-saving modes

- **Screen blank.** The computer display requires considerable battery power. To turn off power to the display, do as follows:
  1. Press Fn+F3. A panel for selecting a power plan (in Windows XP, power scheme) appears.

2. Select **Power off display (keep current power plan)** (in Windows XP, **keep current power scheme**).

Notes: You can also turn off the computer display as follows:

1. Press Fn+F3. A panel for selecting a power plan (in Windows XP, power scheme) appears.
2. Select **Fn+F3 Settings**.
3. Select **Power off display**.
4. Click **OK**. The next time you press Fn+F3, you can turn off the computer display.

- **Sleep (standby in Windows XP).** In sleep (standby) mode, your work is saved to memory, and then the solid state drive or the hard disk drive and the computer display are turned off. When your computer wakes up, your work is restored within seconds.

  To put your computer into sleep (standby) mode, press Fn+F4. To return from sleep (standby) mode, press the Fn key.
- **Hibernation.** By using this mode, you can turn off your computer completely without saving files or exiting from any applications that are running. When you enter hibernation, all open applications, folders, and files are saved to the hard disk, and then the computer turns off. To enter hibernation, press Fn+F12. To resume your session, press the power button for no more than 4 seconds.

When you are not using the wireless features, such as *Bluetooth* or wireless LAN, turn them off. This will help conserve power. To turn off the wireless features, press Fn+F5.

Enabling the wakeup function

If you put your computer into hibernation mode, and the wakeup function is disabled (this is the default setting), the computer does not consume any power. If the wakeup function is enabled, it consumes a small amount of power. To enable the function, do as follows:

For Windows 7 and Windows Vista:

1. Click **Start** → **Control Panel** → **System and Security** (in Windows Vista, **System and Maintenance**).
2. Click **Administrative Tools**.
3. Click **Task Scheduler**. If you are prompted for an administrator password or confirmation, type the password or provide confirmation.
4. From the left pane, select the task folder for which you want to enable the wakeup function. The scheduled tasks are displayed.
5. Click a scheduled task, and then click the **Conditions** tab.
6. Under Power, select the check box for **Wake the computer to run this task**.

For Windows XP:

1. Click **Start** → **Control Panel** → **Performance and Maintenance**.
2. Click **Scheduled Tasks**. The scheduled tasks are displayed.
3. Right-click on a scheduled task.
4. Click **Properties**.
5. Click the **Settings** tab.
6. Under Power Management, select the check box for **Wake the computer to run this task**.

Enabling the battery alarm

You can program your computer so that when the battery power falls below a certain level, three events occur: the alarm goes off, a message is displayed, and the LCD is turned off. Do as follows:

1. Start Power Manager.

2. Click the **Global Power Settings** tab.
3. For **Low battery alarm** or **Critically low battery alarm**, set the percentage of the power level and set the action.

Note: If your computer enters sleep (standby) or hibernation mode when the battery is low, but the alarm message has not yet appeared, the message will appear when the computer resumes. To resume normal operation, press **OK**.

Handling the battery

DANGER

Do not attempt to disassemble or modify the battery pack.

Attempting to do so can cause an explosion, or liquid leakage from the battery pack.

A battery pack other than the one specified by Lenovo, or a disassembled or modified battery pack is not covered by the warranty.

DANGER

If the rechargeable battery pack is incorrectly replaced, there is danger of an explosion. The battery pack contains a small amount of harmful substances. To avoid possible injury:

- **Replace only with a battery of the type recommended by Lenovo.**
- **Keep the battery pack away from fire.**
- **Do not expose it to excessive heat.**
- **Do not expose it to water or rain.**
- **Do not short-circuit it.**
- **Store it in a cool dry place.**
- **Keep it away from children.**

The battery pack is a consumable supply.

If your battery begins to discharge too quickly, replace the battery pack with a new one of the type recommended by Lenovo. For more information on replacing the battery pack, contact your Customer Support Center.

DANGER

Do not drop, crush, puncture, or subject to strong forces. Battery abuse or mishandling can cause the battery to overheat, which can cause gasses or flame to “vent” from the battery pack or coin cell. If your battery is damaged, or if you notice any discharge from your battery or the buildup of foreign materials on the battery leads, stop using the battery and obtain a replacement from the battery manufacturer.

DANGER

Only recharge the battery pack strictly according to instructions included in the product documentation.

DANGER

Do not put the battery pack in trash that is disposed of in landfills. When disposing of the battery, comply with local ordinances or regulations and your company's safety standards.

DANGER

There is a danger of an explosion if the backup battery is incorrectly placed. The lithium battery contains lithium and can explode if it is not properly handled, or disposed of. Replace only with a battery of the same type. To avoid possible injury or death, Do not: (1) throw or immerse into water, (2) allow it to heat to more than 100°C (212°F), or (3) attempt to repair or disassemble it. Dispose of it as required by local ordinances or regulations and your company's safety standards.

Connecting to the network

Your computer has one or more network adapters for connecting to the Internet and to your company's wired LAN or wireless LAN network.

Note: Some models come with a built-in wireless WAN card enabling you to establish wireless connections over remote public or private networks.

“Access Connections” on page 35 is a connectivity assistant program for creating and managing location profiles. Each location profile stores all the network and Internet configuration settings needed for connecting to a network infrastructure from a specific location such as a home or an office.

Your modem enables you to connect to your network or the Internet from almost anywhere. If your network has a phone line or lines dedicated to dial-up clients, you can use a modem to establish a connection to the LAN. If your network does not have dial-up networking capability (and many do not), you might be able to access some information and e-mail over the Internet.

Ethernet connections

You can connect to your network or a broadband connection, such as DSL or CATV, by use of the Ethernet feature built into your computer. This feature enables you to do 1Gbps half or full duplex data transmission.

To connect to a network via Ethernet, you can use Access Connections.

Note: Your computer might have both a modem connector and an Ethernet connector. Be sure to connect your cable to the correct one.

Wireless connections

Wireless connection is the transfer of data without the use of cables by means of radio waves only.

Depending on the frequency used for data transmission, the area covered, or the type of the device used for data transfer, the following categories of wireless networks may be available to you:

Wireless LAN

A wireless local area network covers a relatively small geographic area, such as an office building or a house. Devices based on the 802.11 standards can connect to this network.

Wireless WAN

A wireless wide area network covers a broader geographic area. Cellular networks are used for data transmission, and access is provided by a wireless service carrier.

Bluetooth

One of a number of technologies used to create a wireless personal area network. *Bluetooth* can connect devices a short distance from one another, and is commonly used for connecting peripheral devices to a computer, transferring data between hand-held devices and PC, or remotely controlling and communicating with devices such as mobile phones.

WiMAX (Worldwide Interoperability for Microwave Access)

This long-range wireless data transmission technology based on the 802.16 standard, is expected to provide the user a “last mile” broadband connectivity similar to that provided by cable or ADSL, but without the need to physically connect a cable to the PC.

Making wireless LAN connections

Your computer comes with a built-in wireless networking card and a configuration utility to help you make wireless connections and monitor the status of your connection, so that you can stay connected to your network while you are in the office, in a meeting room, or at home, with no need for a wired connection.

Attention:

- If you carry your computer with the wireless LAN feature into an airplane, check the services with the airline before boarding the airplane.
- If there are restrictions on the use of computers on an airplane with the wireless feature, you need to disable it before boarding. To disable it, refer to the instructions in “Enabling or disabling the wireless feature” on page 70.

Note: You can purchase a wireless networking card as an option. For more information, refer to “Finding ThinkPad options” on page 149.

Tips for using the wireless LAN feature

- Place your computer so that there are as few obstacles as possible between the wireless LAN access point and the computer.
- For the best connection of the wireless LAN feature, open your computer display to an angle of slightly more than 90 degrees.
- If you use the wireless feature (the 802.11 standard) of your computer simultaneously with a *Bluetooth* option, data transmission speed can be delayed and the performance of the wireless feature can be degraded.

Wireless networking setup

To use the built-in wireless networking card (the 802.11 standard) to communicate, start Access Connections.

Note: Before you start setting up wireless networking connections by using Access Connections, obtain a Network Name (SSID) and your encryption information from your network administrator.

Access Connections, a connectivity assistant program, can easily enable one network adapter and disable the other adapters on demand. After setting up your wireless networking connection, you can use the program to quickly switch the network settings.

Wireless upgradeable ThinkPad models

Your computer can be wireless upgradeable. This means that your computer has an antenna that can support wireless LAN access when wireless LAN access points are available. Wireless devices are available from Lenovo. For more information, see “Finding ThinkPad options” on page 149.

Using wireless WAN connections

Wireless Wide Area Network (wireless WAN) enables you to establish wireless connections over remote public or private networks. These connections can be maintained over a large geographical area, such as a city or an entire country, by use of multiple antenna sites or satellite systems maintained by wireless service providers.

Some ThinkPad notebooks come with a built-in wireless WAN card integrating some wireless WAN technologies, such as 1xEV-DO, HSPA, 3G or GPRS. You can connect to the Internet or your company network with the built-in wireless WAN card and the configuration utility to make a wireless WAN connection and monitor its status.

Note: Wireless WAN service is provided by authorized service providers in some countries.

To find the location of the wireless WAN antenna on your computer, refer to “Location of the UltraConnect wireless antennas” on page 244.

To use the wireless WAN feature, start Access Connections.

For maximum performance from your wireless WAN connection, please keep the following best usage guidelines in mind:

- Keep your notebook away from your body.
- Place your notebook on a flat surface and open your computer display to an angel of slightly more than 90 degrees.
- Place your notebook away from concrete or brick walls that may dampen cellular signals.
- Best reception will be available near windows and other locations where cellular phone reception is the strongest.

Using *Bluetooth*

For Windows 7 and Windows Vista

If your computer is equipped with the Integrated *Bluetooth* features, you can enable or disable the features by pressing Fn+F5. If you press Fn+F5, a list of wireless features is displayed. You can enable or disable the *Bluetooth* features with a single click.

To configure a *Bluetooth* device or manage connection settings, you can use ***Bluetooth* Devices** in Control Panel.

1. Click **Start → Control Panel**.
2. Click **Hardware and Sound**.
3. Click **Devices and Printers** (in Windows Vista, ***Bluetooth* Devices**).

To send data to a *Bluetooth*-enabled device, do as follows:

1. Right-click data that you want to send.
2. Select **Send To → Bluetooth Devices**.

For details, refer to the Windows online help.

Note: If you use the wireless feature (the 802.11 standard) of your computer simultaneously with a *Bluetooth* option, data transmission speed can be delayed and the performance of the wireless feature can be degraded.

For Windows XP

If your computer is equipped with the Integrated *Bluetooth* features, you can enable or disable the features by pressing Fn+F5.

If you press Fn+F5, a list of wireless features is displayed. You can enable or disable the *Bluetooth* features with a single click.

In Windows XP, you can use either ThinkPad *Bluetooth* with Enhanced Data Rate Software, or the Microsoft *Bluetooth* software. By default, ThinkPad *Bluetooth* with Enhanced Data Rate Software is installed on your computer.

Using Bluetooth for the first time on your computer

If this is the first time *Bluetooth* has been used on your computer, follow either of the following procedures:

1. Double-click the **My *Bluetooth* Places** icon on the desktop, or the ***Bluetooth*** icon in the task bar. The Start Using *Bluetooth* window opens, and some virtual device drivers are installed automatically.
2. Wait until the installation of the drivers is complete.

OR

1. Right-click the **My *Bluetooth* Places** icon on the desktop, or the ***Bluetooth*** icon in the task bar.
2. Select **Start Using *Bluetooth***. The Start Using *Bluetooth* window opens, and some virtual device drivers are installed automatically.
3. Wait until the installation of the drivers is complete.

Some other virtual device drivers will be installed on demand when you use certain *Bluetooth* profiles for the first time.

Using the Microsoft *Bluetooth* software

If you are using Windows XP and want to use the Microsoft standard *Bluetooth* features, install the software by following the instructions in “Installing the Microsoft *Bluetooth* software in Windows XP” on page 67.

For information about how to use the *Bluetooth* function, do as follows:

1. Press Fn+F5 to turn on *Bluetooth*.
2. Click **Start → Control Panel**.
3. Click **Printers and Other Hardware**.
4. Click ***Bluetooth* Devices**.
5. Click the **Options** tab.
6. Click **Learn more about *Bluetooth* Settings**.

Using ThinkPad *Bluetooth* with Enhanced Data Rate Software

If ThinkPad *Bluetooth* with Enhanced Data Rate Software is installed on your computer, two icons are displayed on the screen:

- My *Bluetooth* Places on the desktop
- *Bluetooth* Configuration in the system tray of the task bar

To use the *Bluetooth* features, do the following:

1. Double-click the **My *Bluetooth* Places** icon on the desktop.
2. For Windows XP, go to *Bluetooth* Tasks and double-click **View devices in range**. A list of the devices on which *Bluetooth* has been enabled appears.
3. Click the device to which you want access. A list of the services available on that device appears, as follows:
   - *Bluetooth* keyboard and mouse (Human interface devices)
   - Printer (HCRP)
   - Audio gateway
   - Headset
   - PIM synchronization
   - Fax
   - File transfer
   - PIM item transfer
   - Dial-up networking
   - Network access
   - *Bluetooth* serial port
   - Bluetooth Imaging
   - Hands Free
   - AV profile
4. Click the service you want.

For more information, press the F1 key to open the online help for *Bluetooth*.

Bluetooth Configuration

To use the configuration features of *Bluetooth*, right-click the icon. A pop-up menu appears. Select ***Bluetooth* Setup Wizard** or **Advanced Configuration**.

The *Bluetooth* Setup Wizard has the following capabilities:

- Finding all *Bluetooth*-enabled devices that can provide services
- Finding a specific *Bluetooth*-enabled device that you want to use, and configuring the services on that device
- Configuring the *Bluetooth*-enabled services on your computer that are provided for remote devices
- Configuring the name and device type of your computer

The Advanced Configuration has the following functions:

- Configuring the name and device type of your computer
- Configuring your computer settings so that remote *Bluetooth*-enabled devices can find your computer
- Configuring your computer settings so that your computer can find remote *Bluetooth*-enabled devices
- Configuring, on your computer, the *Bluetooth*-enabled services provided for remote devices
- Configuring the services on remote *Bluetooth*-enabled devices
- Displaying information about *Bluetooth* hardware

For details, refer to the help for *Bluetooth*. To see the help, double-click **My *Bluetooth* Places**, and click **Help** and then ***Bluetooth* help**. Another way to start the help is to right-click ***Bluetooth* Configuration** in the system tray of the task bar, and click **Advanced Configuration** and then **Help**.

Installing the Microsoft *Bluetooth* software in Windows XP

If you want to use the Microsoft *Bluetooth* software, do as follows:

1. First uninstall the ThinkPad *Bluetooth* with Enhanced Data Rate Software.
   a. Turn *Bluetooth* power off.
   b. Click **Start → Control Panel**.
   c. Click **Add or Remove Programs**.
   d. Select **ThinkPad *Bluetooth* with Enhanced Data Rate Software**; then click **Change/Remove** to uninstall the software.
   e. Follow the instructions on the screen.
2. Next install the Microsoft *Bluetooth* software as follows:
   a. Turn *Bluetooth* power on. Microsoft *Bluetooth* software is loaded automatically.
   b. If the Found New Hardware Wizard window pops up, do the following:
      1) Select **No, not this time**, and then click **Next**.
      2) Select **Install from a list or specific location (Advanced)**; then click **Next**.
      3) Select **Search for the best driver in those locations**.
      4) Select **Include this location in the search:**, and type `C:\SWTOOLS\Drivers\MSBTooth`, or specify the location in which you placed the extracted INF file. Then click **Next**.
   c. Click **Finish**.

Installing ThinkPad Bluetooth with Enhanced Data Rate Software in Windows XP

If you are using the Microsoft *Bluetooth* software and want to use ThinkPad *Bluetooth* with Enhanced Data Rate Software instead, replace the Microsoft *Bluetooth* software with ThinkPad *Bluetooth* with Enhanced Data Rate Software as follows:

1. Press Fn+F5 to turn the *Bluetooth* power on.
2. Click **Start → Run**.
3. Type `C:\SWTOOLS\Drivers\TPBTooth\Setup.exe` (or specify the full path to the setup.exe file you have downloaded from http://www.lenovo.com/support); then click **OK**.
4. Click **Next**.
5. Select **I accept the terms in the license agreement**; then click **Next**.
6. Click **Next** to select the default destination folder.

   If you need to change the destination folder, click **Change**, select or enter the name of the destination folder in the Change current destination folder window, and click **OK**.
7. Click **Install** to begin installation.
8. Click **OK** to accept the driver signature.
9. Click **Finish**.
10. Restart the computer if necessary.

If you did not turn the *Bluetooth* power on before installing ThinkPad *Bluetooth* with Enhanced Data Rate Software, that is, if you skipped step 1, replace the *Bluetooth* driver as follows:

1. Click **Start → Control Panel**.

2. Click **Performance and Maintenance**; then click **System**.
3. Click the **Hardware** tab; then click **Device Manager**.
4. Double-click ***Bluetooth* Radios** to extract the *Bluetooth* Radios device tree.
5. Double-click the **ThinkPad *Bluetooth* with Enhanced Data Rate** icon to open the Properties window.
6. Click the **Driver** tab; then click **Update Driver**.
7. Click **No, not this time**, and then click **Next**.
8. Select **Install from a list or specific location (Advanced)**, and then click **Next**.
9. Select **Don't search. I will choose the driver to install**; then click **Next**.
10. Select the driver that has no “Digital Signed” icon; then click **Next**.
11. Click **Finish**.

Note: If you use the wireless feature (the 802.11 standard) of your computer simultaneously with a *Bluetooth* option, data transmission speed can be delayed and the performance of the wireless feature can be degraded.

Using WiMAX

Some ThinkPad notebooks come with a built-in wireless LAN card integrating WiMAX technology.

WiMAX, a long-range wireless data transmission technology based on the 802.16 standard, provides you with a “last mile” broadband connectivity similar to that offered by cable or ADSL, but without the need to physically connect a cable to the PC.

To use the WiMAX feature, start Access Connections.

For Windows 7: To start the Access Connections wizard, see “Accessing applications in Windows 7” on page 33, and follow the instructions on the screen.

For Windows Vista and Windows XP: To start the Access Connections wizard, click **Start → All Programs → ThinkVantage → Access Connections**. Then follow the instructions on the screen.

Checking wireless connection status

Access Connections Gauge (Windows 7)

If your computer is running Windows 7, the Access Connections Gauge in the task bar displays the signal strength and status of your wireless connection.

Note: To display Access Connections Gauge in the task bar, see the Help in Access Connections.

You can find more detailed information about the signal strength and status of your wireless connection by opening Access Connections or by right-clicking the Access Connections Gauge in the task bar and selecting **View Status of Wireless Connection**.

- Access Connections Gauge states: wireless LAN
  - Power to the wireless radio is off or no signal.
  - Power to the wireless radio is on. The signal strength of the wireless connection is poor. To improve signal strength, move your system closer to the wireless access point.
  - Power to the wireless radio is on. The signal strength of the wireless connection is marginal.

– Power to the wireless radio is on. The signal strength of the wireless connection is excellent.

- Access Connections Gauge states: wireless WAN
  - No signal
  - Signal level 1
  - Signal level 2
  - Signal level 3

Note: For more information about Access Connections Gauge, see the Help in Access Connections.

Access Connections icon and wireless status icon

The Access Connections icon displays general connection status.

The wireless status icon displays the signal strength and status of your wireless connection.

You can find more detailed information about the signal strength and status of your wireless connection either by opening Access Connections or by double-clicking the Access Connections wireless status icon in the task bar.

Note: If your computer is a Windows 7 model, to display the Access Connections status icon and the wireless status icon in the system tray, refer to the Access Connections on-line help.

- Access Connections icon states
  - No location profile is active or none exists.
  - Current location profile is disconnected.
  - Current location profile is connected.
- Wireless status icon states: wireless LAN
  - Power to the wireless radio is off.
  - Power to the wireless radio is on. No association.
  - Power to the wireless radio is on. No signal.
  - Power to the wireless radio is on. The signal strength of the wireless connection is excellent.
  - Power to the wireless radio is on. The signal strength of the wireless connection is marginal.
  - Power to the wireless radio is on. The signal strength of the wireless connection is poor. To improve signal strength, move your system closer to the wireless access point.
- Wireless status icon states: wireless WAN
  - Power to the WAN radio is off
  - No association
  - No signal
  - Signal level 1
  - Signal level 2
  - Signal level 3

Note: If you have trouble in making a connection, try moving your computer closer to your wireless access point.

Enabling or disabling the wireless feature

To enable or disable the wireless feature, press Fn+F5. A list of wireless features is displayed. You can turn the feature on and off with a single click.

You can also enable or disable the feature by the following procedures.

To enable the wireless feature, do as follows:

1. Click the Access Connections wireless status icon in the system tray.
2. Click **Power On Wireless Radio**.

To disable the wireless feature, do as follows:

1. Click the Access Connections wireless status icon in the system tray.
2. Click **Power Off Wireless Radio**.

Notes:

- You can use the wireless radio switch to disable the wireless radio of all the wireless devices on your computer.
- If your computer is a Windows 7 model, to display the Access Connections status icon and the wireless status icon in the system tray, refer to the Access Connections on-line help.

Using a projector or external display

Your computer comes with many features to increase the enjoyment of your computer and help you give presentations with confidence.

Changing display settings

You can change the display settings, such as font size or color mode or numeric lock.

Font size

To make a font size larger, do as follows:

For Windows 7:

1. Right-click on the desktop, and click **Personalize**.
2. Click **Display** at the left.
3. Select the **Medium** or **Larger** radio button.
4. Click **Apply**. The change will take effect after you log off.

For Windows Vista:

1. Right-click on the desktop, and click **Personalize**.
2. Click **Adjust font size (DPI)** under **Tasks** at the left. If you are prompted for an administrator password or confirmation, type the password or provide confirmation.
3. Select the **Larger scale (120DPI)- make text more readable** check box.
4. Click **OK**. The change will take effect after the computer restarts. You are prompted to restart the computer after you click **OK** or **Apply**.

For Windows XP:

1. Right-click on the desktop, and click **Properties**. The Display Properties window opens.
2. Click the **Appearance** tab.

3. Under **Font Size**, click **Large Fonts** or **Extra Large Fonts**.
4. Click **Apply** to apply the settings.
5. Click **OK**. If you are prompted to restart the computer after you click **OK** or **Apply**, the change will take effect after the computer restarts.

Numeric lock

To change the numeric lock setting, do as follows:

For Windows 7:

1. Right-click on the desktop, and click **Personalize**.
2. Click **Display** at the left.
3. Click **Change display settings**.
4. Click **Advanced settings**, select the **On Screen Display** tab, and then click **Num Lock Settings**.
5. The setting window opens.
6. Follow the instructions on the screen.

For Windows Vista:

1. Right-click on the desktop, and click **Personalize**.
2. Click **Display Settings**.
3. Click **Advanced Settings**, select the **On Screen Display** tab, and then click **Num Lock Settings**.
4. The setting window opens.
5. Follow the instructions on the screen.

For Windows XP:

1. Right-click on the desktop, and click **Properties**. The Display Properties window opens.
2. Click the **Settings** tab.
3. Click **Advanced**, select the **On Screen Display** tab, and then click **Num Lock Settings**.
4. The setting window opens.
5. Follow the instructions on the screen.

Connecting a projector or external display

Attaching an external monitor

Your computer can support a maximum video resolution of up to 2048x1536 (with an external monitor attached to the CRT connector) or up to 2560x1600 (with an external monitor attached to the DisplayPort connector), provided that the external monitor also supports that resolution. For more details, refer to the manuals provided with your monitor.

You can set any resolution for either the computer display or the external monitor. When you use both at the same time, the resolution of both is the same. If you set a higher resolution for the computer display, you can see only part of the screen at a time. You can see other parts by moving the image with the TrackPoint or another pointing device.

You can move the display output to the computer display, the external monitor, or both in the Display Settings window (in Windows XP, Display Properties window).

Connecting an external monitor

To attach an external monitor, do as follows:

For Windows 7:

1. Connect the external monitor to the monitor connector; then connect the monitor to an electrical outlet
2. Turn on the external monitor.
3. Change the display output location by pressing Fn+F7. This allows you to switch between viewing output on the external display, the computer display, and both displays.

Note: If your computer cannot detect the external monitor, right-click on the desktop, then select **Screen resolution**. Click the **Detect** button.

For Windows Vista:

1. Connect the external monitor to the monitor connector; then connect the monitor to an electrical outlet.
2. Turn on the external monitor.
3. If this is the first time the external monitor has been connected, the New Display Detected dialog box opens. Select one of the following, and then click **OK**.
   - **Duplicate my desktop on all displays (mirrored)**
   - **Show different parts of my desktop on each display (extended)**
   - **Show my desktop on the external monitor only**

   Note: If your computer cannot detect the external monitor, the New Display Detected dialog box does not open. For details, refer to the Windows online help.

For Windows XP:

1. Turn off the computer.
2. Connect the external monitor to the monitor connector; then connect the monitor to an electrical outlet.
3. Turn on the external monitor and the computer.
4. Change the display output location by pressing Fn+F7. This allows you to switch between viewing output on the external display, the computer display, and both displays.

Notes:

- Do not change the display output location while a moving picture is being drawn, for example, while playing a movie or a game, or viewing a business presentation. Close the application before changing the display output location, or change the display mode before you open an MPEG file to play.
- If you are attaching an external monitor that supports only VGA mode (640x480 resolution), do not view output on both the computer display and the external monitor. Doing so would cause the external monitor screen to be scrambled and the output not to be displayed; in addition, it could cause damage to the screen. Use the external monitor only.
- If the external TFT monitor you connect has an analog interface, flickers or ripples may appear on some displays, such as the shutdown screen of Windows. This is caused by the external TFT monitor, and cannot be fixed by adjusting the external TFT monitor or the computer side settings.

Setting the monitor types

To set your monitor type, do as follows:

For Windows 7:

1. Connect the external monitor to the monitor connector, and then connect the monitor to an electrical outlet.
2. Turn on the external monitor.

3. Right-click on the desktop, and click **Screen resolution**.

   Note: If your computer cannot detect the external monitor, click the **Detect** button.
4. Set **Resolution**.
5. Click **Advanced Settings**.
6. Click the **Monitor** tab. Check the monitor information window to make sure that the monitor type is correct. If it is, click **OK** to close the window; otherwise do as follows.
7. If more than two monitor types are displayed, select **Generic PnP Monitor** or **Generic Non-PnP Monitor**.
8. Click **Properties**. If you are prompted for an administrator password or confirmation, type the password or provide confirmation.
9. Click the **Driver** tab.
10. Click **Update Driver**.
11. Click **Browse my computer for driver software**, and then click **Let me pick from a list of device drivers on my computer**.
12. Clear the **Show compatible hardware** check box.
13. Select **Manufacturer** and **Model** for your monitor. If you cannot find your monitor in the list, stop the installation of this driver and use the driver shipped with your monitor.
14. After updating the driver, click **Close**.
15. Click **OK**.

Note: To change the color settings, right-click on the desktop, and click **Screen resolution**. Click **Advanced Settings**, select the **Monitor** tab, then set **Colors**.

For Windows Vista:

Note: If you select **Show different parts of my desktop on each display (extended)**, refer to "Using the Extend desktop function" on page 76.

1. Connect the external monitor to the monitor connector, and then connect the monitor to an electrical outlet.
2. Turn on the external monitor.
3. Press Fn+F7 to change the display output location to the external monitor.
4. Right-click on the desktop, and click **Personalize**.
5. Click **Display Settings**. The Display Settings window opens.
6. Click **Advanced Settings**.
7. Click the **Monitor** tab. Check the monitor information window to make sure that the monitor type is correct. If it is, click **OK** to close the window; otherwise do as follows.
8. If more than two monitor types are displayed, select **Generic PnP Monitor** or **Generic Non-PnP Monitor**.
9. Click **Properties**. If you are prompted for an administrator password or confirmation, type the password or provide confirmation.
10. Click the **Driver** tab.
11. Click **Update Driver**.
12. Click **Browse my computer for driver software**, and then click **Let me pick from a list of device drivers on my computer**.
13. Clear the **Show compatible hardware** check box.
14. Select **Manufacturer** and **Model** for your monitor. If you cannot find your monitor in the list, stop the installation of this driver and use the driver shipped with your monitor.
15. After updating the driver, click **Close**.

16. Set **Resolution** and **Colors** in the Display Settings window.
17. Click **OK**.

For Windows XP:

1. Connect the external monitor to the monitor connector, and then connect the monitor to an electrical outlet.
2. Turn on the external monitor and the computer.
3. Press Fn+F7 to change the display output location to the external monitor.
4. Right-click on the desktop, and click **Properties** to open the Display Properties window.
5. Click the **Settings** tab.
6. Click **Advanced**.
7. Click the **Monitor** tab. Check the monitor information window to make sure that the monitor type is correct. If it is, click **OK** to close the window; otherwise do as follows.
8. If more than two monitor types are displayed, select **Default Monitor**.
9. Click **Properties**.
10. Click the **Driver** tab.
11. Click **Update Driver**. The Hardware Update Wizard appears.
12. Click **No, not this time**, and then click **Next**.
13. Select **Install from a list or specific location (Advanced)**, and then click **Next**.
14. Select **Don't search. I will choose the driver to install**, and then click **Next**.
15. Clear the **Show compatible hardware** check box.
16. Select **Manufacturer** and **Model** for your monitor. If you cannot find your monitor in the list, stop the installation of this driver and use the driver shipped with your monitor.
17. After updating the driver, click **OK** to close the Properties window.
18. Set **Colors** and **Screen area** in the Display Properties window.
19. Click **OK**.

Considerations for attaching an external monitor

- When installing an operating system, you must install the display driver for your monitor that is supplied with the computer, and the Monitor INF file that is supplied with the external monitor.
- If you set a resolution higher than the resolution you are using on the panel, and use a panel that does not support that resolution, take advantage of the virtual screen function, which enables you to display only a part of the high-resolution screen image your computer produces. You can see other parts of the image by moving the screen with the TrackPoint or other pointing device.
- If the external monitor you are using is outdated, the resolution and the refresh rate may be limited.

Using the DVI monitor

If your computer has one of the optional expansion units, a ThinkPad Mini Dock Plus Series 3 or a ThinkPad Mini Dock Series 3, you can use the Digital Visual Interface (DVI) monitor through the DVI connector of that unit.

Notes:

- The screen mode that can be used depends on the specifications of the DVI monitor.
- Before you attach the DVI monitor, make sure that the computer is attached to the expansion unit and the system works properly.

To attach the DVI monitor, do as follows:

1. Turn off the computer.

2. Connect the DVI monitor to the DVI connector of the expansion unit, and then connect the monitor to an electrical outlet.
3. Turn on the DVI monitor and the computer. The system starts.

If the computer output does not appear on the DVI monitor, do as follows:

For a computer that has the Intel display adapter:

1. Press Ctrl+Alt+F12. The **Intel Graphics Media Accelerator Driver for mobile** window appears.
2. Select **Digital Display**, **Intel Dual Display Clone**, or **Extended Desktop**. If you select **Digital Display**, the computer output appears on the DVI monitor only. If you select **Intel Dual Display Clone** or **Extended Desktop**, the output appears both on the computer display and on the DVI monitor.
3. Click **OK**.

Considerations for attaching a DVI monitor

Connect the DVI monitor to the expansion unit, and turn it on before you turn on the computer. Otherwise the system cannot recognize that the monitor is connected. If the option for enabling the DVI monitor in the Display Properties window does not appear, try closing the window and opening it again. If the option still does not appear, make sure that the connector of the monitor is attached firmly, and repeat the procedure for attaching the monitor.

Using the DisplayPort connector

Your computer has a DisplayPort connector, the latest digital display interface for connection to various external devices, such as CRT monitors, projectors, or even HDTV. This compact connector enables a plug-and-play setup and supports adaptors that can plug into DVI, VGA, or HDMI ports.

The DisplayPort connector of your computer supports audio as well as video streaming.

Setting up a presentation

Note: If your computer is a Windows 7 model, it does not support Presentation Director, but the Fn+F7 or Win+P key combination is available for switching display output to a connected projector.

Presentation Director provides an easy way to set up your computer to help you give presentations with confidence, even when you are away from your office.

Use Presentation Director to adjust resolution settings and temporarily disable power management timers to ensure an uninterrupted presentation.

Presentation Director has some predefined presentation schemes. To apply a presentation scheme, you can use the Fn+F7 key combination.

To start Presentation Director, click **Start** → **All Programs** → **ThinkVantage** → **Presentation Director**, and follow the instructions on the screen.

Projecting video

To display information and make presentations, you can attach a data projector to your computer. Attach the data projector to the monitor connector on your computer.

Note: It may take several seconds before the projector displays the image. If you do not see your desktop displayed after 60 seconds, try pressing Fn+F7 to switch between different display output locations.

You can create a presentation scheme by following the instructions of the Presentation Director, with the projector attached to your computer. You can save the scheme for a future presentation with the same equipment.

Playing sound

Your projector might have one or more audio-input connectors. To project sound, you will need to attach the combo audio jack on your computer to these connectors, using an audio cable (commercially available).

Using dual displays

Using the Extend desktop function

Your computer supports a function named the Extend desktop. With the Extend desktop function, you can display output on both the computer display and an external monitor. You can also display different desktop images on each monitor.

You can use the Extend desktop function without changing any settings. If the function does not work, refer to “Enabling the Extend desktop function” on page 76 to enable it.

Considerations for using the Extend desktop function

- If you want to show DOS full-screen while in the Extend desktop mode, only the primary display shows DOS; the other display is blacked out.

  If your computer has the Intel display adapter, you can designate the other display as the primary display by doing the following:

  1. Press Ctrl+Alt+F12. The Intel CUI window opens.
  2. Select **Extended Desktop**.
  3. Change the setting to designate the primary display.
- When an application using the DirectDraw or the Direct3D is played in full-screen mode, it is shown only on the primary display.
- You cannot use the display switching function when you are in the Extend desktop mode.

Enabling the Extend desktop function

To enable the Extend desktop function, do as follows:

For Windows 7:

1. Connect the external monitor to the monitor connector; then connect the monitor to an electrical outlet.
2. Turn on the external monitor.
3. Press Fn+F7, then select **Extend**.

To change the resolution for each monitor, do as follows:

1. Right-click on the desktop, and click **Screen resolution**.
2. Click the **Monitor-1** icon (for the primary display, the computer display).
3. Select the **Resolution** of the primary display.
4. Click the **Monitor-2** icon (for the secondary display, the external display).
5. Select the **Resolution** of the secondary display.
6. Place the icons for the monitors so that they touch.

   Note: You can set the monitors in any relative position, but the icons must touch each other.
7. Click **OK** to apply the changes.

Note: To change the color settings, right-click on the desktop, and click **Screen resolution**. Click **Advanced Settings**, select the **Monitor** tab, then set **Colors**.

For Windows Vista:

1. Connect the external monitor to the monitor connector; then connect the monitor to an electrical outlet.
2. Turn on the external monitor.
3. If this is the first time the external monitor has been connected, the New Display Detected dialog box opens. Select **Show different parts of my desktop on each display (extended)**, and then click **OK**.

To change the resolution for each monitor, do as follows:

1. Right-click on the desktop, and click **Personalize**.
2. Click **Display Settings**. The Display Settings window opens.
3. Click the **Monitor-1** icon (for the primary display, the computer display).
4. Select the **Resolution** and the **Colors** of the primary display.
5. Click the **Monitor-2** icon (for the secondary display, the external display).
6. Select the **Resolution** and the **Colors** of the secondary display.
7. Place the icons for the monitors so that they touch.

   Note: You can set the monitors in any relative position, but the icons must touch each other.
8. Click **OK** to apply the changes.

For Windows XP:

1. Turn off the computer.
2. Connect the external monitor to the monitor connector; then connect the monitor to an electrical outlet.
3. Turn on the external monitor and the computer.
4. Right-click on the desktop, and click **Properties** to open the Display Properties window.
5. Click the **Settings** tab, and click the **Monitor-2** icon.
6. Select the **Extend my Windows desktop onto this monitor** check box and click **Apply**. (If the Monitor Settings window opens, click **Yes**.)

To change the resolution for each monitor, do as follows:

1. Click the **Monitor-1** icon (for the primary display, the computer display).
2. Select the **color quality** and the **screen resolution** of the primary display.
3. Click the **Monitor-2** icon (for the secondary display, the external display).
4. Select the **color quality** and the **screen resolution** of the secondary display.
5. Place the icons for the monitors so that they touch.

   Note: You can set the monitors in any relative position, but the icons must touch each other.
6. Click **OK** to apply the changes.

Using audio features

Your computer is equipped with the following:

- Combo audio jack, 1/8 inch (3.5 mm) in diameter
- Built-in stereo speakers
- Built-in dual array digital microphone

Your computer also has an audio chip that enables you to enjoy various multimedia audio features:

- Compliant with Intel High Definition Audio.

- Recording and playback of PCM and WAV files in 16-bit or 24-bit format.
- Playback of a WAV file at a sample rate of 44.1KHz to 192 KHz.
- Playback of MIDI files through a Wave table synthesizer under Microsoft Windows operating systems.
- Playback of MP3 files through the Windows Media Player or a software MP3 player.
- Recording from various sound sources, such as a headset attached either to the combo audio jack of your computer or to the microphone jack of the ThinkPad Mini Dock Series 3 or the ThinkPad Mini Dock Plus Series 3.

Note: The combo audio jack does not support a conventional microphone.

The following table shows which functions of the audio devices attached to the jacks on your computer or docking station are supported.

Table 3. Audio feature list

Jacks	Headset with a 3.5 mm 4-pole plug	Conventional headphone	Conventional microphone
Combo audio jack	Headphone and microphone functions supported	Headphone function supported	Not supported
Headphone jack of the docking station	Only headphone function supported Microphone function not supported	Headphone function supported	Not supported
Microphone jack of the docking station	Not supported	Not supported	Microphone function supported

Beam Forming feature

A built-in dual array digital microphone is mounted at the top of the display. Whereas a conventional single-element microphone captures sounds from all around, the built-in dual array digital microphone is designed to capture the sound from an exceptionally limited angle, through the combination of a specialized microphone array with a capability of digital signal processing. Therefore the microphone captures sounds from the area in front of the system clearly, but blocks out almost all the sounds from outside the capturing range. Thus the speech of a user sitting in front of the system is input to the system without interference from noise in the surrounding area. To record your speech most clearly, you should speak directly in front of the computer.

Configuring for sound recording

To configure the microphone for optimized sound recording, open the SmartAudio window as follows:

For Windows 7 and Windows Vista: Click **Start** → **Control Panel** → **Hardware and Sound** → **SmartAudio**. The SmartAudio window opens.

For Windows XP: Click **Start** → **Control Panel**. Switch to Classic View and click **SmartAudio**. The SmartAudio window opens.

Using an integrated camera

If your computer has an integrated camera, when you press Fn+F6 to open the Communications settings window, the camera will be launched and the green camera-in-use indicator will turn on automatically. In the Communications settings window, you can preview your video image and take a snapshot of your current image.

You can also use the integrated camera with other programs that provide features such as photographing, video capturing, and video conferencing. To use the integrated camera with other programs, open one of the programs and start the photographing, video capturing, or videoconferencing function. Then, the camera will start automatically and the green camera-in-use indicator will turn on. For more information about using the camera with a program, refer to the documentation that came with the program.

If you do not want the camera to be launched automatically when you press Fn+F6 or when you use a program, press Fn+F6 to open the Communications settings window and click the **Hide my camera image** button to disable the camera.

Configuring camera settings

You can configure the camera settings to meet your needs, such as adjusting the quality of the video output.

To configure the camera settings, do the following:

1. Press Fn+F6. The Communications settings window opens.
2. Click the **Manage Settings** button. The Communications Utility window opens.
3. In the Communications Utility window, configure the camera settings depending on your individual needs.

Using the ThinkLight feature

You can use your computer under less than perfect lighting conditions by enabling the ThinkLight feature. To illuminate the keyboard by turning on your ThinkLight, press Fn+PgUp.

Note: Avoid using your computer in dark conditions for prolonged periods. It is bad for your eyes.

Note: ThinkLight is not available in ThinkPad X220 Tablet and X220i Tablet models.

Using the media card reader

Depending on the model, your computer may have an ExpressCard slot for a 54 mm-wide card, a media card reader slot, or a smart card reader slot.

If your computer has a media card reader slot, it supports the following cards:

- SD card
- SDHC card
- SDXC card
- MultiMediaCard (MMC)

Notes:

- Your computer does not support the CPRM feature for the SD card.
- When transferring data to or from a flash media card, such as an SD card, do not put your computer in sleep (standby) or hibernation mode before the data transfer is complete. To do so might cause damage to your data.

For more information on ExpressCards, smart cards, and flash media cards, refer to any of the following topics:

- “Inserting an ExpressCard, a flash media card, or a smart card” on page 80.
- “Removing an ExpressCard, a flash media card, or a smart card” on page 81.

Inserting an ExpressCard, a flash media card, or a smart card

Attention: Do not insert an ExpressCard while the computer is in sleep (standby) mode or hibernation mode. If you do, the computer may not respond when you try to resume using it.

Attention: Before you start installing any of the following cards, touch a metal table or a grounded metal object. This action reduces any static electricity from your body. The static electricity could damage the card.

- 54 mm-wide ExpressCard
- Flash media card, such as an SD card, an SDHC card, an SDXC card, and a MultiMediaCard
- Smart card

For information about the location of the ExpressCard slot, flash media card reader slot, and smart card slot, see “Locating computer controls, connectors, and indicators” on page 1.

To insert a 54 mm-wide ExpressCard into the ExpressCard slot, do the following:

1. Make sure that the card is correctly oriented.
2. Push the slot cover, and insert the card into the slot with the notched edge facing upward. Then press the card firmly into the connector.

To insert a flash media card into the 4-in-1 media card reader slot, do the following:

1. Make sure that the card is correctly oriented.
2. Insert the card firmly into the 4-in-1 media card reader slot. The card may stop before it is completely installed into the slot.

To insert a smart card into the smart card slot, do the following:

1. Make sure that the card is correctly oriented.
2. Insert the card so that the metallic contact is up and goes in first. Insert the card firmly into the slot.

If the ExpressCard, flash media card, or smart card is not Plug and Play, do the following:

- For Windows 7:
  1. Open Control Panel.
  2. Click **Hardware and Sound**.
  3. Click **Device Manager**. If you are prompted for an administrator password or confirmation, type the password or provide confirmation.
  4. From the **Action** menu, select **Add legacy hardware**. The Add Hardware Wizard starts.
  5. Follow the instructions on the screen.
- For Windows Vista and Windows XP:
  - Open Control Panel and switch to Classic view.
  - Double-click the **Add Hardware** icon. The Add Hardware Wizard starts.
  - Follow the instructions on the screen.

Removing an ExpressCard, a flash media card, or a smart card

Attention: Before removing a storage ExpressCard, such as a flash memory ExpressCard, a solid state ExpressCard, or a memory card reader ExpressCard, from an ExpressCard slot, **you must stop** the ExpressCard. Otherwise, data on the ExpressCard might be corrupted or lost.

Attention: Do not remove an ExpressCard while the computer is in sleep (standby) mode or hibernation mode. If you do, the system will not respond when you try to resume operation.

For information about the location of the ExpressCard slot, flash media card reader slot, and smart card slot, see “Locating computer controls, connectors, and indicators” on page 1.

To remove an ExpressCard, a flash media card, or a smart card, do the following:

For Windows 7:

1. Click the **Show hidden icons** in the task bar.
2. Right-click **Safely Remove Hardware and Eject Media** icon.
3. Select corresponding item to eject the card from the Windows operating system.
4. Press the card to eject it from your computer.
5. Remove the card from your computer and store it safely for future use.

For Windows Vista and Windows XP:

1. Click the **Safely Remove Hardware** icon in the task bar
2. Select corresponding item to eject the card from the Windows operating system.
3. Press the card to eject it from your computer.
4. Remove the card from your computer and store it safely for future use.

Note: If you do not remove the card from your computer after you eject the card from the Windows operating system, the card can no longer be accessed. To access the card, you must remove it once, then insert it again.

Chapter 3. You and your computer

This chapter provides you information about accessibility and traveling with your computer.

This chapter contains the following topics:

- “Accessibility and comfort” on page 83
- “Traveling with your computer” on page 86

Accessibility and comfort

Because your computer enables you to work in so many places, it is important that you remain attentive to good posture, good lighting and proper seating. By keeping these considerations in mind, you can improve performance and achieve greater comfort.

Lenovo is committed to providing the latest information and technology to our customers with disabilities. Refer to our accessibility information which outlines our efforts in this area.

Ergonomic information

Working in the virtual office may mean adapting to frequent changes in your environment. Following some simple rules will make things easier and bring you the maximum benefits of your computer. Keeping in mind such basics as good lighting and proper seating, for example, can help you improve your performance and achieve greater comfort.

Note: This example shows someone in a conventional setting. Even when not in such a setting, you can follow many of these tips. Develop good habits, and they will serve you well.

General Posture: Below are some general recommendations for assuming a healthy working posture. It is best to periodically make minor modifications in your working posture to deter the onset of discomfort caused by long periods of working in the same position. Frequent, short breaks from your work will also help to prevent any minor discomfort associated with your working posture.

Display: Position the display to maintain a comfortable viewing distance of 510-760 mm (20-30 inch). Avoid glare or reflections on the display from overhead lighting or outside sources of light. Keep the display screen

© Copyright Lenovo 2011

clean and set the brightness to levels that enable you to see the screen clearly. Press Fn+Home or End to adjust display brightness.

Head Position: Keep your head and neck in a comfortable and neutral (vertical, or upright) position.

Chair: Use a chair that gives you good back support and seat height adjustment. Use chair adjustments to best suit your desired posture.

Arm and Hand Position: If available, utilize chair arm rests or an area on your working surface to provide weight support for your arms. Keep your forearms, wrists, and hands in a relaxed and neutral (horizontal) position. Type with a soft touch without pounding the keys.

Leg Position: Keep your thighs parallel to the floor and your feet flat on the floor or on a footrest.

What if you are traveling?

It may not be possible to observe the best ergonomic practices when you are using your computer while on the move or in a casual setting. Regardless of the setting, try to observe as many of the tips as possible. Sitting properly and using adequate lighting, for example, will help you maintain desirable levels of comfort and performance.

Questions about vision?

ThinkPad notebook's visual display screens are designed to meet the highest standards and to provide you with clear, crisp images and large, bright displays that are easy to see, yet easy on the eyes. Of course, any concentrated and sustained visual activity can be tiring. If you have questions on eye fatigue or visual discomfort, consult a vision care specialist for advice.

Adjusting your computer to fit you

Because your computer enables you to work in so many places, it is important that you remain attentive to good posture, good lighting and proper seating. Refer to the following tips to improve performance and achieve greater comfort:

Active sitting and rest breaks: The longer you sit and work with your computer the more important it is to observe your working posture. Following “general recommendations for maintaining a healthy working posture” on page 83 and practicing “active sitting” are the best ways to avoid discomfort associated with your working postures. Making minor voluntary postural changes and taking short frequent work breaks are the key ingredients for healthy computing. Your computer is a light and mobile system; remember that it can easily be repositioned on your working surface to accommodate many posture modifications you might wish to make.

Work area setup options: Familiarize yourself with all of your office furniture so that you know how to adjust your work surface, seat, and other work tools to accommodate your preferences for comfort. If your work area is not in an office setting, be sure to take special note of employing active sitting and utilizing work breaks. Note that there are many ThinkPad product solutions available to help you modify and expand your computer to best suit your needs. Access the following Web site to view some of these options: http://www.lenovo.com/accessories/services/index.html. Explore your options for docking solutions and external products that can provide the adjustability and features that you want.

ThinkPad features that promote comfort: There are easy to use ThinkPad features that can help make your computer more comfortable to use.

Accessibility information

Lenovo is committed to providing people with disabilities greater access to information and technology. As a result, the following information provides ways to help users that have hearing, vision, and mobility limitations get the most out of their computer experience.

Assistive technologies enable users to access information in the most appropriate way. Some of these technologies are already provided in your operating system, others can be purchased through vendors, or accessed through the World Wide Web.

Assistive technologies

Some accessibility technologies are available through the Accessibility Options program. Depending on your operating system, the number of accessibility options available varies. In general, accessibility options enhance the way users with hearing, vision, or mobility limitations navigate and use their computer. For example, some users might not have the fine motor skills required to use a mouse or select key combinations. Other users might require larger fonts or high-contrast display modes. In some cases, magnifiers and built-in speech synthesizers are available. For detailed information about each of these features, consult the Microsoft help system.

To use the Accessibility Options program, do as follows:

For Windows 7 and Windows Vista:

1. Click **Start**, and then click **Control Panel**.
2. Click **Ease of Access**.
3. Click **Ease of Access Center**.

For Windows XP:

1. Click **Start**, and then click **Control Panel**.
2. Click **Accessibility Options**.

This help system supports the accessibility features provided by your Windows operating system, screen readers designed to operate in the Windows environment, and Windows keyboard navigation. For a complete listing of Microsoft Windows Keyboard Guide, go to:
http://www.microsoft.com/enable/Products/altkeyboard.aspx

Screen reader technologies are primarily focused on software application interfaces, help systems, and a variety of online documents. However, in the case where a screen reader cannot read documents, the document must first go through a conversion process. One solution converts Adobe PDF files into a format that is read by the screen-reader programs. This solution is a Web-based service provided by Adobe Systems Incorporated. Through http://access.adobe.com, Adobe PDF documents can be converted to HTML or plain text in many languages. One conversion options converts PDF documents on the Internet. A second option enables users to submit the URL of an Adobe PDF file through e-mail to convert it to HTML or ASCII text. Adobe PDF files on a local hard disk drive, local CD-ROM, or local area network (LAN) can also be converted by attaching the Adobe PDF file to an e-mail message.

FullScreen Magnifier function

Some models support the FullScreen Magnifier function, which enlarges the active window and makes it easier for you to use the computer display.

To enable the FullScreen Magnifier function, press Fn+Spacebar. The active window is magnified and the FullScreen Magnifier icon is displayed in the system tray at bottom right of your screen. Then you can change the zoom resolution. Click the FullScreen Magnifier icon and make your choice.

To disable the FullScreen Magnifier function, click the FullScreen Magnifier icon and select **Exit** or press Fn+Spacebar.

Traveling with your computer

When you travel abroad, your computer can help you feel more at home and at ease. With your own computer and its files, you can be confident about gathering and offering information to clients and coworkers.

Attending to some important details that can help foreign travel go smoothly:

- "Travel tips" on page 86
- "Travel accessories" on page 86

Travel tips

Use the following travel tips to travel more confidently and efficiently with your computer.

1. While it is safe to allow your computer to go through the x ray machines at airport security stations, it is important to keep your eyes on the computer at all times to prevent theft.
2. Consider bringing an airplane or automobile adapter for your computer.
3. Because you might need to use your computer in less than perfect lighting conditions, turn on the ThinkLight by pressing Fn+PgUp to illuminate the keyboard.
4. If you carry an ac power adapter, detach the ac cord from it to avoid damaging the cord.

Note: If you use the ThinkLight, the battery life is slightly reduced.

Travel tips on airplanes

If you carry your computer into an airplane, check the travel tips.

Attention:

- For using onboard computer or wireless (such as Internet, *Bluetooth*, etc.) service, check the services with the airline before boarding the airplane.
- If there are restrictions on the use of computers with the wireless feature on an airplane, you need to disable it before boarding. To disable it, refer to the instructions in "Enabling or disabling the wireless feature" on page 70.

Follow the tips below.

1. Be careful about the seat in front of you on airplanes. Angle your computer display so that it does not get caught when the person in front of you leans back.
2. Remember to hibernate or turn off your computer when taking off.

Travel accessories

Here is a checklist of things to consider packing when you are going to be out of the office:

Travel Essentials:

- ThinkPad ac power adapter
- External mouse, if you are accustomed to using one
- Ethernet cable
- Standard phone cable and modular jack (RJ-11)
- Extra battery, charged

- A quality carrying case that provides adequate cushion and protection

If you are traveling to another country you might want to consider these items:

- An ac power adapter for the country that you are traveling to
- An adapter to connect to a phone line in that country

Other items you may wish to consider:

- ThinkPad ac/dc Combo Adapter
- External storage device
- Phone line splitter, in case you need to dial manually or use your modem without disconnecting the phone line

Chapter 4. Security

This chapter provides information about how to protect your computer from theft and unauthorized use.

- “Attaching a mechanical lock” on page 89
- “Using passwords” on page 89
- “Hard disk security” on page 95
- “Setting the security chip” on page 96
- “Using a fingerprint reader” on page 97
- “Notice on deleting data from your hard disk drive or solid state drive” on page 105
- “Using and understanding firewalls” on page 106
- “Protecting data against viruses” on page 106

Attaching a mechanical lock

You can attach a mechanical lock to your computer, to help prevent it from being removed without your permission.

Attach a mechanical lock to the keyhole of the computer; then secure the chain on the lock to a stationary object. Refer to the instructions shipped with the mechanical lock.

Note: You are responsible for evaluating, selecting, and implementing the locking devices and security features. Lenovo makes no comments, judgments, or warranties about the function, quality, or performance of locking devices and security features.

Using passwords

By using passwords, you can help prevent your computer from being used by others. Once you set a password, a prompt appears on the screen each time you power on the computer. Enter your password at the prompt. You cannot use the computer unless you type the correct password.

Make sure that only authorized individuals access your computer. Establishing different kinds of passwords requires that other possible users know the proper passwords in order to access your computer or your data.

If this icon appears, enter the Power-on password or Supervisor password.

If this icon appears, enter the Hard disk password.

If this icon appears, enter the Supervisor password.

Click on the items below to find out more about passwords and how to use them to protect your computer.

- “Passwords and sleep (standby) mode” on page 90
- “Power-on password” on page 90
- “Hard disk security” on page 95

© Copyright Lenovo 2011

- “Supervisor password” on page 93

Passwords and sleep (standby) mode

If you have set passwords and you put your computer into sleep (standby) mode by pressing Fn+F4, the procedure for resuming operation is as follows:

- You are not prompted to type the password when resuming operation.
- If any hard disk or the solid state drive has a hard disk password, it is unlocked automatically when you resume operation.

Typing passwords

If this icon appears, enter the Power-on password or Supervisor password.

If this icon appears, enter the Hard disk password.. If you want to enter a master hard disk password, do the following:

1. Press F1. The icon changes to this:
2. Now type the master hard disk password.

Note: To return to the first icon, press F1 again.

If this icon appears, enter the Supervisor password.

Note: You can press Backspace if you press a wrong key while you are typing your password.

Power-on password

You can set a power-on password to help protect your computer against access by unauthorized users.

If you set a power-on password, the password prompt appears on the screen whenever you turn on the computer. You must enter the correct password to start using the computer.

Setting a power-on password

1. Print these instructions.
2. Save all open files, and exit all applications.
3. Turn your computer off and then turn it on again.
4. When the logo screen is displayed, press F1. The ThinkPad Setup opens.
5. Select **Security**, using the cursor directional keys to move down the menu.
6. Select **Password**.
7. Select **Power-on Password**.
8. Choose your power-on password, and type it within the brackets on the**Enter New Password** field.

   Note: You can set the minimum length of a power-on password in the **ThinkPad Setup** menu. For details, refer to “Security menu” on page 183.
9. Press Enter once to move to the next line. Retype the password you just entered to verify it.
10. Commit your password to memory and press Enter. A Setup Notice window is displayed.

Note: You might want to note your power-on password in a safe place. Otherwise, if you forget it, you have to take your computer to a Lenovo reseller or a marketing representative to have the password canceled.

11. Press F10 to exit.

Changing or removing the power-on password

To change the power-on password, follow the steps 1 through 9 above in “Setting a power-on password” on page 90, typing your password to get access to the ThinkPad Setup.

To change the password, do the following:

1. In the **Enter Current Password** field, type the current power-on password.
2. In the **Enter New Password** field, type the new power-on password; then retype the password you just entered to verify it in the **Confirm New Password** field.
3. Follow step 10 and step 11 above in “Setting a power-on password” on page 90 to change your power-on password.

To remove the password, do the following:

1. In the **Enter Current Password** field, type the current power-on password.
2. Leave the **Enter New Password** and **Confirm New Password** fields blank.
3. Follow step 10 and step 11 above in “Setting a power-on password” on page 90 to remove your power-on password.

Hard disk passwords

Two types of hard disk passwords help protect the information stored on the hard disk:

- User hard disk password
- Master hard disk password, which requires a user hard disk password

If a user hard disk password has been set, but no master hard disk password has been, the user must enter the user hard disk password in order to gain access to files and applications on the hard disk.

The master password can be set and used only by a system administrator. Like a master key, it enables the administrator to get access to any hard drive in a system. The administrator sets the master hard disk password; and no one else knows it. Then the administrator sets a user hard disk password for each computer in the network, and tells each user the password for his or her computer. The user can change the user hard disk password as desired, but the administrator can still get access by using the master password.

Note: When a master hard disk password is set, only the administrator can remove the user hard disk password.

Setting a hard disk password

1. Print these instructions.
2. Save all open files, and exit all applications.
3. Turn your computer off and then on again.
4. When the logo screen is displayed, press F1. The ThinkPad Setup opens.
5. Select **Security**, using the cursor directional keys to move down the menu.
6. Select **Password**.
7. Select **Hard Disk *x* Password**, where ***x*** is the number of the hard disk drive for which you want to set a password.

8. A Setup Confirmation window opens. You are prompted to select **User** or **User + Master**. Select User if you want to set only one hard disk password. If you are an administrator or supervisor, you can select **User + Master** to set two passwords. (The user can change the user password later.)
9. If you select **User + Master**, go to step 12.
10. If you select **User** only, a new-password window opens. Type your new password in the **Enter New Password** field.

    Notes:

    - You can set the minimum length of a hard disk password in the ThinkPad Setup menu. For details, refer to "Security menu" on page 183.
    - If you set a hard disk password of over seven characters, the hard disk drive can be used only with a computer that can recognize a hard disk password of over seven characters. If you then install the hard disk drive in a computer that cannot recognize a hard disk password that contains more than seven characters, you cannot get access to the drive.
11. Press Enter once to move to the next line. Retype the password you just entered to verify it. Go to step 18 to complete the procedure.
12. If you select **User + Master**, a message window opens and prompts you to set up a user hard disk password first. Click **Continue**.
13. A new hard disk user password window opens. Type your new password in the **Enter New Password** field.
14. Press Enter once to move to the next line. Retype the password you just entered to verify it.
15. A message window opens and prompts you to set the master hard disk password. Click **Continue**.
16. A new master hard-disk password window opens. Type your new password in the **Enter New Password** field.
17. Press Enter once to move to the next line. Retype the password you just entered to verify it.
18. Commit your password to memory and press Enter. A Setup Notice window is displayed.

    Attention: You might want to note your passwords and keep them in a safe place. Otherwise, if you forget the user-only password, or both user and master passwords, Lenovo cannot reset your passwords or recover data from the hard disk. You must take your computer to a Lenovo reseller or a marketing representative to have the hard disk drive replaced. Proof of purchase is required, and a fee will be charged for parts and service.
19. Press F10 to exit from the Setup Notice window.

The next time you turn on your computer, you will have to type the user or master hard disk password in order to start your computer and get access to your operating system.

Changing or removing a hard disk password

Follow steps 1 through 7 in "Setting a hard disk password" on page 91 above, typing your password to get access to the ThinkPad Setup program.

To change or remove the User only hard disk password, do as follows:

- To change the hard disk password, type the current password in the **Enter Current Password** field. Then type the new password in the **Enter New Password** field, and retype the password you just entered to verify it in the **Confirm New Password** field. Press Enter, and a Setup Notice window is displayed. Press F10 to exit from the Setup Notice window. The user hard disk password will be changed.
- To remove the hard disk password, type the current password in the **Enter Current Password** field. Then leave the **Enter New Password** and **Confirm New Password** fields blank, and press Enter. A

Setup Notice window is displayed. Press F10 to exit from the Setup Notice window. The user hard disk password will be removed.

To change or remove the **User + Master** hard disk password, select **User HDP** or **Master HDP**.

If you choose **User HDP**, do one of the following:

- To change the user hard disk password, type the current user hard disk password or the current master hard disk password in the **Enter Current Password** field. Then type the new user hard disk password in the **Enter New Password** field, and retype the password you just entered to verify it in the **Confirm New Password** field. Press Enter, and a Setup Notice window is displayed. Press F10 to exit from the Setup Notice window. The user hard disk password will be changed.
- To remove the user hard disk password, type the current master hard disk password in the **Enter Current Password** field. Then leave the **Enter New Password** and **Confirm New Password** fields blank, and press Enter. A Setup Notice window is displayed. Press F10 to exit from the Setup Notice window. Both the user and master hard disk passwords will be removed.

If you choose **Master HDP**, do one of the following:

- To change the master hard disk password, type the current master hard disk password in the **Enter Current Password** field. Then type the new master hard disk password in the **Enter New Password** field, and retype the password you just entered to verify it in the **Confirm New Password** field. Press Enter, and a Setup Notice window is displayed. Press F10 to exit from the Setup Notice window. The master hard disk password will be changed.
- To remove the master hard disk password, type the current master hard disk password in the **Enter Current Password** field. Then leave the **Enter New Password** and **Confirm New Password** fields blank, and press Enter. A Setup Notice window is displayed. Press F10 to exit from the Setup Notice window. Both the user and master hard disk passwords will be removed.

Supervisor password

The supervisor password protects the system information stored in the ThinkPad Setup. Without it, no one can change the configuration of the computer. It provides the following security features:

- If a supervisor password is set, a password prompt appears when you try to start the ThinkPad Setup. Unauthorized users cannot get access to configuration data.
- The system administrator can use the supervisor password to get access to a computer even if the user of that computer has set a power-on password. The supervisor password overrides the power-on password.
- If both a supervisor password and a power-on password are set, you can do the following only if you have the supervisor password:
  - Deleting the power-on password
  - Changing or deleting the supervisor password
  - Enabling or disabling the Wake on LAN®and Flash over LAN features
  - Enabling or disabling the Internal Network Option ROM feature
  - Changing date and time
  - Enabling or disabling the Lock UEFI BIOS Setting feature
  - Enabling or disabling the Password at unattended boot
  - Specifying the minimum length for power-on passwords and hard disk passwords
  - Changing the setting for the security chip
  - Enabling or disabling the Boot Device List F12 Option
  - Enabling or disabling the Boot Order Lock

- Enabling or disabling the Flash BIOS Updating by End-Users feature
- Enabling or disabling the Internal Network device
- Enabling or disabling the Internal Wireless device
- Enabling or disabling the Internal *Bluetooth* device
- Enabling or disabling the Internal Wireless WAN device
- Enabling or disabling the Security mode
- Enabling or disabling the Reader priority
- Erasing the fingerprint data

Notes:

- The system administrator can set the same supervisor password on many ThinkPad notebooks to make administration easier.
- By enabling the Lock UEFI BIOS Settings in the Password menu when you set the supervisor password, you make it impossible for anyone but you to make changes.

Setting a supervisor password

Only a system administrator will be able to apply this procedure.

1. Print these instructions.
2. Save all open files, and exit all applications.
3. Turn your computer off and then turn it on again.
4. When the logo screen is displayed, press F1. The ThinkPad Setup opens.
5. Select **Security**, using the cursor directional keys to move down the menu.
6. Select **Password**.
7. Select **Supervisor Password**.
8. A window opens that prompts you to enter a new password.
9. Choose your supervisor password and type it in the **Enter New Password** field; then press Enter.
10. Press Enter to move to the next line. Retype the password you just entered to verify it.
11. Commit your password to memory and press Enter. A Setup Notice window is displayed.

    Attention: You might want to note your password and keep it in a safe place. If you forget your supervisor password, Lenovo can not reset your password. You must take your computer to a Lenovo reseller or a Lenovo marketing representative to have the system board replaced. Proof of purchase is required, and a fee will be charged for parts and service.
12. Press F10 to exit from the Setup Notice window.

The next time you open the ThinkPad Setup, you will be prompted to type your password to proceed.

Changing or removing the supervisor password

To change or remove the supervisor password, follow steps 1 through 8 above in “Setting a supervisor password” on page 94, typing your password to get access to the ThinkPad Setup.

To change the password, do the following:

1. In the **Enter Current Password** field, type the current supervisor password.
2. In the **Enter New Password** field, type the new supervisor password; then retype the password you just entered to verify it in the **Confirm New Password** field.

3. Follow step 11 and step 12 above in “Setting a supervisor password” on page 94 to change your supervisor password.

To remove the password, do the following:

1. In the **Enter Current Password** field, type the current supervisor password.
2. Leave the **Enter New Password** and **Confirm New Password** fields in blank.
3. Follow step 11 and step 12 above in “Setting a supervisor password” on page 94 to remove your supervisor password.

Hard disk security

Your computer supports an enhanced security solution for solid state drive or hard disk drive. To protect passwords from unauthorized security attacks, several of the latest technologies and algorithms are integrated into UEFI BIOS and hardware design of ThinkPad notebooks.

To maximize security, do the following:

1. Set a power-on password as well as a hard disk password for your internal solid state drive or hard disk drive. Refer to the procedures in “Power-on password” on page 90 and “Hard disk passwords” on page 91. For security, a longer password is recommended.
2. To provide reliable security for UEFI BIOS, use the security chip and a security application with a Trusted Platform Module management feature. Refer to “Setting the security chip” on page 96.

   Note: Microsoft Windows 7 and Windows Vista support TPM management feature.
3. If a “Disk Encryption hard disk drive and Encryption solid state drive” on page 96 is installed in your computer, be sure to protect the contents of your computer memory from unauthorized access by use of drive encryption software, such as Microsoft Windows BitLocker® Drive Encryption in Windows 7 and Windows Vista. Refer to “Using Windows BitLocker Drive Encryption” on page 95.
4. Before you dispose of, sell, or hand over your computer, make sure to delete data stored on it. Refer to “Notice on deleting data from your hard disk drive or solid state drive” on page 105.

Notes: The following drive(s) can be protected by UEFI BIOS:

- The hard disk drive built into your computer.

Using Windows BitLocker Drive Encryption

To help protect your computer from being subject to unauthorized access, be sure to use drive encryption software, such as Windows BitLocker Drive Encryption.

Windows BitLocker Drive Encryption is an integral security feature of Windows 7 and Windows Vista. It is supported in Ultimate and Enterprise editions of Windows 7 and Windows Vista. It can help you protect the operating system and data stored in your computer data, even if your computer is lost or stolen. BitLocker works by encrypting all user and system files, including the swap and hibernation files.

BitLocker uses a Trusted Platform Module to provide enhanced protection for your data and to ensure early boot component integrity. A compatible TPM is defined as a V1.2 TPM.

To check the BitLocker status, click **Start → Control Panel → System and Security (in Windows Vista, Security) → BitLocker Drive Encryption**.

For details about Windows BitLocker Drive Encryption, go to the Help and Support for Windows 7 or Windows Vista, or search for “Microsoft Windows BitLocker Drive Encryption Step-by-Step Guide” on Microsoft web site.

Disk Encryption hard disk drive and Encryption solid state drive

Some models contain the Disk Encryption hard disk drive or Encryption solid state drive. This feature helps to protect your computer against security attacks on media, NAND flash or device controllers by use of a hardware encryption chip. For the efficient use of the encryption feature, be sure to set a Hard disk passwords for the internal storage device.

Setting the security chip

Strict security requirements are imposed on network client computers that transfer confidential information electronically. Depending on the options you ordered, your computer might have an embedded security chip, a cryptographic microprocessor. With the security chip and Client Security Solution, you can do the following:

- Protect your data and system
- Strengthen access controls
- Secure communications

Setting the Security Chip

The choices offered in the Security Chip submenu under the **Security** menu of the ThinkPad Setup are as follows:

- **Security Chip**: activates, inactivates, or disables the Security Chip.
- **Security Reporting Options**: enables or disables each Security Reporting Option.
- **Clear Security Chip**: clears the encryption key.

Notes:

1. Be sure that the Supervisor password has been set in the ThinkPad Setup. Otherwise anyone can change the settings for the Security Chip.
2. If you are using Client Security Solution, handle the Security Chip as follows:
   - Do not clear the Security Chip. If you do, the functions assigned to the keys will be erased.
   - Do not disable the Security Chip. If you do, Client Security Solution will not work.
3. If the Security Chip is removed or replaced, or a new one has been added, the computer will not start. You will hear 4 cycles of 4 beeps each, or you see error message 0176 or 0192.
4. If the Security Chip is inactive or disabled, Clear Security Chip will not be displayed.
5. When you clear the Security chip, be sure to turn your computer off and then turn it on again after you set the Security chip to Active. Otherwise, the choice of Clear Security Chip is not displayed.

To set an item in the Security Chip submenu:

1. Print these instructions. To set the Security Chip, you must turn your computer off and then on again.
2. Save all open files, and exit all applications.
3. Turn your computer off and then turn it on again.
4. When the logo screen is displayed, press F1. The ThinkPad Setup opens.
5. Using the cursor keys, move to **Security**. The **Security** menu opens.
6. Using the cursor keys, move to **Security Chip**, and press Enter. The Security Chip submenu opens.
7. Using the cursor keys, move to an item you want to set. When the item you want is highlighted, press Enter.
8. Set the items you want to set.
9. Press F10 to exit.

10. Click **Yes** in the Setup Confirmation window.

To set the Security Chip, you have to open the Client Security Solution, and follow the instructions on the screen.

Note: If your computer is a Windows 7 model, Client Security Solution is not preinstalled on your system. To configure the security chip, you need to download the latest version of Client Security Solution from the Lenovo Web site. To download Client Security Solution, go to: http://www.lenovo.com/support. Then follow the instructions on the screen.

Using a fingerprint reader

This section introduces how to use a fingerprint reader in your computer.

Using a fingerprint reader in ThinkPad X220 and X220i

Depending on the options you ordered, your computer may have an integrated fingerprint reader. By enrolling your fingerprint and associating it with a power-on password, a hard disk password, or both passwords beforehand, you can start the computer, log on to the system, and enter the ThinkPad Setup by swiping your finger over the reader, without typing a password. Thus fingerprint authentication can replace passwords and enable simple and secure user access.

For more advanced security, Client Security Solution can be installed. The software is compatible with a variety of user authentication mechanisms, such as those involving fingerprint authentication. This fingerprint reader can work with the software.

Note: If your computer is a Windows 7 model, Client Security Solution is not preinstalled on it.

Enrolling your fingerprint

1. Turn on your computer.
2. To start Lenovo Fingerprint software, refer to “Fingerprint Software” on page 35.
3. Follow the instructions on the screen to enroll your fingerprint. For details, refer to the Help for the program.

LED behavior of the fingerprint reader

Table 4. LED behavior list_fingerprint reader

Indicator	Description
LED blinks green.	The fingerprint is being authenticated or has been authenticated.
LED is solid green.	The fingerprint reader is ready to swipe.
LED blinks amber.	The fingerprint could not be authenticated.

Swiping your finger over the reader

To swipe your finger over the reader, do as follows:

1. Place the ball of your finger, that is, the central part of the fingerprint, on the small circle above the reader. Make sure that the entire top joint of the finger is on the reader.

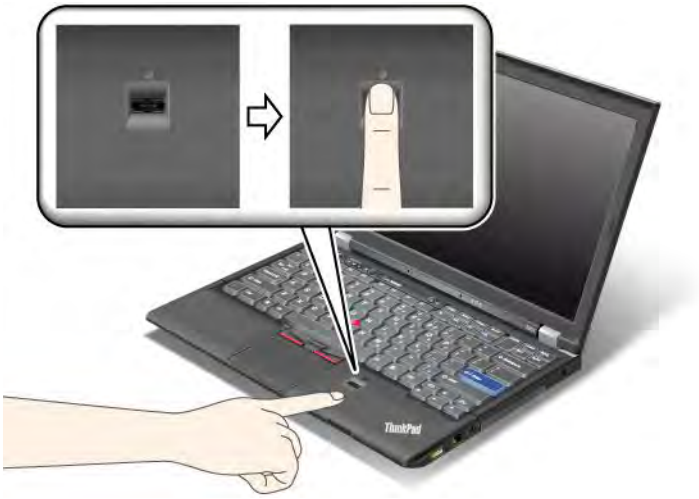

2. Apply light pressure and swipe your finger across the reader in one smooth motion.

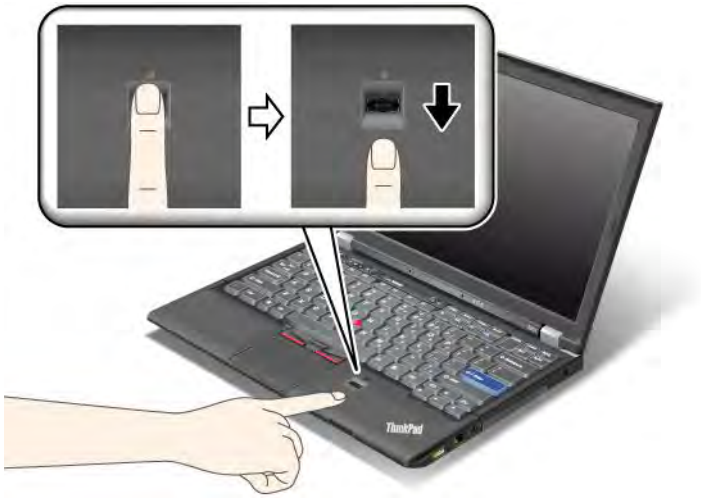

Logging on to the system

After you enroll your fingerprint, log on to the system as follows:

1. Set a Power-on password or a Hard disk security, or both.
2. Turn your computer off and then on again.
3. When prompted, swipe your finger over the reader.
4. On request, type your power-on password, your hard disk password, or both. The enrolled fingerprint is now associated with your power-on password, your hard disk password, or both.

   The next time you start the computer, you can log on to the system by swiping your finger over the reader once.

Attention: If you always use your fingerprint to log on to the system, you may forget your password. Write down your password, and keep it in a safe place. If you forget it and for some reason you cannot swipe your finger across the reader—for example, if you injure that finger, you cannot start the computer or change the password. If you forget your power-on password, you must take your computer to a Lenovo authorized servicer or a marketing representative to have the password canceled.If you forget your hard disk password, Lenovo cannot reset your password or recover data from the hard disk. You must take your computer to a Lenovo authorized servicer or a marketing representative to have the hard disk drive replaced. Proof of purchase is required, and a fee will be charged for parts and service.

Setting the fingerprint reader

If you want to change the settings of the fingerprint reader, follow the procedure below.

The fingerprint submenu under the Security menu of the ThinkPad Setup offers the following choices:

- **Predesktop Authentication**: Enables or disables fingerprint authentication before the operating system is loaded.
- **Reader Priority**: Defines the priority for fingerprint readers if an external fingerprint reader is attached.
- **Security Mode**: Specifies the settings of the security mode.
- **Password Authentication**: Enables or disables password authentication.

  Note: This item appears if High security mode is selected.
- **Reset Fingerprint Data**: By choosing this item, you erase all of the fingerprint data stored in either the internal or external fingerprint reader.

To set an item in the fingerprint submenu:

1. Print these instructions. To configure the fingerprint reader, you must turn your computer off and then on again.
2. Save all open files, and exit all applications.
3. Turn your computer off and then on again.
4. When the logo screen is displayed, press F1. The ThinkPad Setup opens.
5. Using the cursor keys, move to **Security**, and press Enter. The Security menu opens.
6. Using the cursor keys, move to **Fingerprint**, and press Enter. The Fingerprint submenu opens.
7. Using the cursor keys, move to an item you want to set. When that item is highlighted, press Enter.
8. Set the items you want to set.
9. Press F10 to exit.
10. In the Setup Confirmation window, select **Yes**.

Care for the fingerprint reader

The following actions could damage the fingerprint reader or cause it not to work properly:

- Scratching the surface of the reader with a hard, pointed object.
- Scraping the surface of the reader with your fingernail or anything hard.
- Using or touching the reader with a dirty finger.

If you notice any of the following conditions, gently clean the surface of the reader with a dry, soft, lint-free cloth:

- The surface of the reader is dirty or stained.
- The surface of the reader is wet.
- The reader often fails to enroll or authenticate your fingerprint.

If your finger has any of the following conditions, you may not be able to register or authenticate it:

- Your finger is wrinkled.
- Your finger is rough, dry, or injured.
- Your finger is very dry.
- Your finger is stained with dirt, mud, or oil.
- The surface of your finger is very different from when you enrolled your fingerprint.
- Your finger is wet.
- A finger is used that has not been enrolled.

To improve the situation, try the following:

- Clean or wipe your hands to remove any excess dirt or moisture from the fingers.
- Enroll and use a different finger for authentication.
- If your hands are too dry, apply lotion to them.

Using a fingerprint reader in ThinkPad X220 Table and X220i Tablet

Depending on the options you ordered, your computer may have an integrated fingerprint reader. By enrolling your fingerprint and associating it with a power-on password, a hard disk password, or both passwords beforehand, you can start the computer, log on to the system, and enter the ThinkPad Setup by

swiping your finger over the reader, without typing a password. Thus fingerprint authentication can replace passwords and enable simple and secure user access.

For more advanced security, Client Security Solution can be installed. The software is compatible with a variety of user authentication mechanisms, such as those involving fingerprint authentication. This fingerprint reader can work with the software.

Note: If your computer is a Windows 7 model, Client Security Solution is not preinstalled on it.

Enrolling your fingerprint

1. Turn on your computer.
2. To start Lenovo Fingerprint software, refer to “Fingerprint Software” on page 35.
3. Follow the instructions on the screen to enroll your fingerprint. For details, refer to the Help for the program.

LED behavior of the fingerprint reader

Table 5. LED behavior list_fingerprint reader

Indicator	Description
LED blinks green.	The fingerprint is being authenticated or has been authenticated.
LED is solid green.	The fingerprint reader is ready to swipe.
LED blinks amber.	The fingerprint could not be authenticated.

Swiping your finger over the reader

To swipe your finger over the reader in notebook mode, do as follows:

1. Place the ball of your finger, that is, the central part of the fingerprint, on the small circle above the reader. Make sure that the entire top joint of the finger is on the reader.

2. Apply light pressure and swipe your finger across the reader in one smooth motion.

To swipe your finger over the reader in tablet mode, do as follows:

1. Place the ball of your finger, that is, the central part of the fingerprint, on the small circle above the reader. Make sure that the entire top joint of the finger is on the reader.

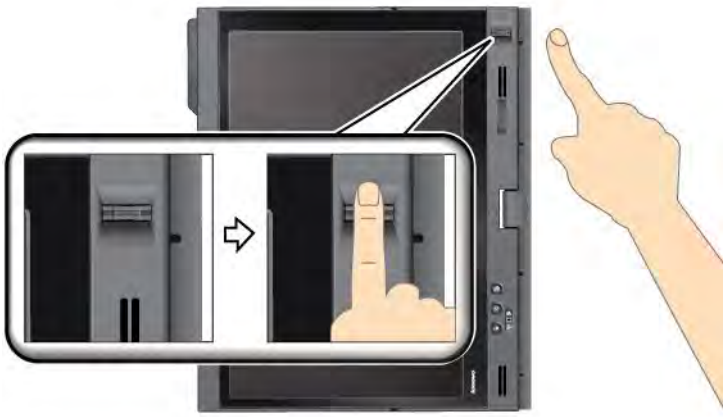

2. Apply light pressure and swipe your finger across the reader in one smooth motion.

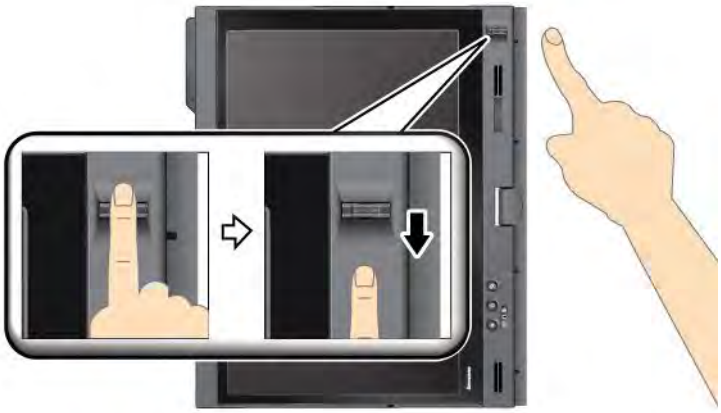

Logging on to the system

After you enroll your fingerprint, log on to the system as follows:

1. Set a Power-on password or a Hard disk security, or both.
2. Turn your computer off and then on again.
3. When prompted, swipe your finger over the reader.
4. On request, type your power-on password, your hard disk password, or both. The enrolled fingerprint is now associated with your power-on password, your hard disk password, or both.

   The next time you start the computer, you can log on to the system by swiping your finger over the reader once.

Attention: If you always use your fingerprint to log on to the system, you may forget your password. Write down your password, and keep it in a safe place. If you forget it and for some reason you cannot swipe your finger across the reader, for example, if you injure that finger, you cannot start the computer or change the password.If you forget your power-on password, you must take your computer to a Lenovo authorized servicer or a marketing representative to have the password canceled.

If you forget your hard disk password, Lenovo cannot reset your password or recover data from the hard disk. You must take your computer to a Lenovo authorized servicer or a marketing representative to have the hard disk drive replaced. Proof of purchase is required, and a fee will be charged for parts and service.

Setting the fingerprint reader

If you want to change the settings of the fingerprint reader, follow the procedure below.

The fingerprint submenu under the Security menu of the ThinkPad Setup offers the following choices:

- **Predesktop Authentication**: Enables or disables fingerprint authentication before the operating system is loaded.
- **Reader Priority**: Defines the priority for fingerprint readers if an external fingerprint reader is attached.
- **Security Mode**: Specifies the settings of the security mode.
- **Password Authentication**: Enables or disables password authentication.

  Note: This item appears if High security mode is selected.
- **Reset Fingerprint Data**: By choosing this item, you erase all of the fingerprint data stored in either the internal or external fingerprint reader.

To set an item in the fingerprint submenu:

1. Print these instructions. To configure the fingerprint reader, you must turn your computer off and then on again.
2. Save all open files, and exit all applications.
3. Turn your computer off and then on again.
4. When the logo screen is displayed, press F1. The ThinkPad Setup opens.
5. Using the cursor keys, move to **Security**, and press Enter. The Security menu opens.
6. Using the cursor keys, move to **Fingerprint**, and press Enter. The Fingerprint submenu opens.
7. Using the cursor keys, move to an item you want to set. When that item is highlighted, press Enter.
8. Set the items you want to set.
9. Press F10 to exit.
10. In the Setup Confirmation window, select **Yes**.

Care for the fingerprint reader

The following actions could damage the fingerprint reader or cause it not to work properly:

- Scratching the surface of the reader with a hard, pointed object.
- Scraping the surface of the reader with your fingernail or anything hard.
- Using or touching the reader with a dirty finger.

If you notice any of the following conditions, gently clean the surface of the reader with a dry, soft, lint-free cloth:

- The surface of the reader is dirty or stained.
- The surface of the reader is wet.
- The reader often fails to enroll or authenticate your fingerprint.

If your finger has any of the following conditions, you may not be able to register or authenticate it:

- Your finger is wrinkled.
- Your finger is rough, dry, or injured.

- Your finger is very dry.
- Your finger is stained with dirt, mud, or oil.
- The surface of your finger is very different from when you enrolled your fingerprint.
- Your finger is wet.
- A finger is used that has not been enrolled.

To improve the situation, try the following:

- Clean or wipe your hands to remove any excess dirt or moisture from the fingers.
- Enroll and use a different finger for authentication.
- If your hands are too dry, apply lotion to them.

Notice on deleting data from your hard disk drive or solid state drive

As computers spread into every corner of life, they process more and more information. The data on your computer, some of which is sensitive, is stored on a storage device, either a hard disk drive or solid state drive. Before you dispose of, sell, or hand over your computer, make sure to delete data stored on it.

Handing your computer over to someone else without deleting the loaded software, such as operating systems and application software, may even violate License Agreements. You are advised to check the terms and conditions of those Agreements.

There are methods that seem to delete the data:

- Move the data to the recycle bin, and then choose the Empty recycle bin command.
- Use the Delete command.
- Format your hard disk drive or solid state drive, using the software for initializing it.
- Using the recovery program, provided by Lenovo, bring the hard disk drive or the solid state drive back to factory-ship state.

These operations, however, only change the file allocation of the data; they do not delete the data itself. In other words, the data retrieval processing is disabled under an operating system such as Windows. The data is still there, even though it seems to be lost. Thus, it is sometimes possible to read the data by use of special software for data recovery. There is a risk that people of bad faith may read and misuse the critical data on hard disk drives or solid state drives for unexpected purposes.

To prevent leakage of data, it becomes very important that you take responsibility for deleting all the data from the hard disk drive or solid state drive when you dispose of, sell, or hand over your computer. You can destroy the data physically by smashing the hard disk drive with a hammer, or magnetically by means of strong magnetic power, thus making the data unreadable. But we recommend that you make use of the software (payware) or service (pay service) specifically developed for the purpose.

For disposing of data on the hard disk drive, Lenovo provides such software as PC Doctor for DOS and the Secure Data Disposal tool. Software provides the interface for full erasure of the contents of a hard disk. To download either application, go to the Lenovo Web site at:
http://www.lenovo.com/support

Note: Running the application will take a couple of hours.

If Encryption solid state drive or Disk Encryption hard disk drive is supported and installed in your computer, you can logically dispose of all the data on a device in a very short time by erasing the cryptographic key. The data encrypted with the old key is not physically erased but remains on the disk; however, it cannot be

decrypted without the old key. This feature is enabled by the ThinkPad Setup Menu Extension Utility and is available as a menu item in the ThinkPad Setup.

Using and understanding firewalls

If your system is preintalled with a firewall program, it protects against computer Internet security threats, unauthorized access, intrusions, and Internet attacks. It also protects your privacy.

For more information about how to use the firewall program, refer to the on-line help that comes with the program.

Protecting data against viruses

Your computer is preinstalled with an antivirus program so you can detect and eliminate viruses. The antivirus program is designed to help you detect and eliminate viruses.

Lenovo provides a full version of antivirus software on your computer with a free 30-day subscription. After 30 days, you must renew the license to continue receiving the antivirus software updates.

For more information about how to use your antivirus software, refer to the help system of your antivirus software.

Chapter 5. Recovery overview

This chapter provides information about the recovery solutions provided by Lenovo.

This chapter contains the following topics:

- “Creating and using recovery media” on page 107
- “Performing backup and recovery operations” on page 109
- “Using the Rescue and Recovery workspace” on page 110
- “Creating and using a rescue medium” on page 111
- “Reinstalling preinstalled applications and device drivers” on page 112
- “Solving recovery problems” on page 113

Notes:

1. There are a variety of methods to choose from when considering how to recover in the event of a software- or hardware-related problem. Some methods vary depending on the type of your operating system.
2. The product on the recovery media may be used only for the following purposes:
   - Restore the product preinstalled on your computer
   - Reinstall the product
   - Modify the product using the Additional Files

Notes: To prevent potential performance risks or unexpected behavior that might be caused by the new hard disk drive technology, it is recommended that you use one of the following back-up software programs:

- ThinkVantage Rescue and Recovery version 4.23 or later (for Windows XP and Windows Vista), 4.3 or later (for Windows 7)
- Symantec Norton Ghost version 15 or later

  Notes: To use this program, do the following:

  1. Click **Start** → **Run**. The Run window opens.
  2. Type `cmd` in the field. Then click **OK.**
  3. Type `ghost -align=1mb` and press Enter.
- Acronis True Image 2010 or later
- Paragon Backup & Recovery 10 Suit or later, Paragon Backup & Recovery 10 Home or later

Creating and using recovery media

You can use recovery media to restore the hard disk drive to the factory default settings. Recovery media are useful if you transfer the computer to another area, sell the computer, recycle the computer, or put the computer in an operational state after all other methods of recovery have failed. As a precautionary measure, it is important to create recovery media as early as possible.

Note: The recovery operations you can perform using recovery media vary depending on the operating system from which the recovery media were created. The recovery media might contain a boot medium and a data medium. Your Microsoft Windows license permits you to create only one data medium, so it is important that you store the recovery media in a safe place after you have made them.

© Copyright Lenovo 2011

Creating recovery media

This section provides instructions on how to create recovery media on the Windows 7 operating system.

Note: On the Windows 7 operating system, you can create recovery media using discs or external USB storage devices. On the Windows Vista and Windows XP operating systems, you can create recovery media using only discs, so this operation is also called “creating Product Recovery discs.”

- To create recovery media on the Windows 7 operating system, click **Start → All Programs → Lenovo ThinkVantage Tools → Factory Recovery Disks**. Then, follow the instructions on the screen.
- To create Product Recovery discs on the Windows Vista operating system, click **Start → All Programs → ThinkVantage → Create Product Recovery Media**. Then, follow the instructions on the screen.
- To create Product Recovery discs on the Windows XP operating system, click **Start → All Programs → ThinkVantage → Create Recovery Media**. Then, follow the instructions on the screen.

Using recovery media

This section provides instructions on how to use recovery media on different operating systems.

- On the Windows 7 operating system and the Windows Vista operating system, you can use recovery media to restore the computer to the factory default settings only. You can use recovery media to put the computer in an operational state after all other methods of recovery have failed.

  Attention: When you use recovery media to restore the computer to the factory default settings, all the files currently on the hard disk drive will be deleted and replaced by the factory default settings.

  To use recovery media on the Windows 7 operating system or the Windows Vista operating system, do the following:

  1. Depending on the type of your recovery media, connect the boot medium (memory key or other USB storage device) to the computer, or insert the boot disc into the optical drive.
  2. Repeatedly press and release the F12 key when turning on the computer. When the **Startup Device Menu** opens, release the F12 key.
  3. Select the desired startup device and press Enter. The restore process begins.
  4. Follow the instructions on the screen to complete the operation.

  Notes:

  1. After restoring your computer to the factory default settings, you might have to reinstall device drivers for some devices. See “Reinstalling preinstalled applications and device drivers” on page 112.
  2. Some computers come with Microsoft Office or Microsoft Works preinstalled. If you need to recover or reinstall your Microsoft Office or Microsoft Works applications, you must use the *Microsoft Office CD* or *Microsoft Works CD*. These discs are provided only with computers preinstalled with Microsoft Office or Microsoft Works.

- On the Windows XP operating system, you can use Product Recovery discs to restore your computer to the factory default settings, perform a custom factory recovery, or perform other rescue and recovery operations such as rescuing individual files. You will be given the option to enter the Rescue and Recovery workspace and choose from a variety of recovery operations.

  Attention: When you use Product Recovery discs to restore the computer to the factory default settings, all the files currently on the hard disk drive will be deleted and replaced by the factory default settings. During the restore process, you will be given the option to save one or more files currently on the hard disk drive to other media before the data is deleted.

  To use Product Recovery discs on the Windows XP operating system, do the following:

1. Repeatedly press and release the F12 key when turning on the computer. When the **Startup Device Menu** opens, release the F12 key.
2. Insert the boot disc into the optical drive.
3. Select the optical drive with the boot disc as the startup device and press Enter. After a short delay, the Rescue and Recovery workspace opens.
4. On the **Rescue and Recovery** menu, click **Restore your system**.
5. Follow the instructions on the screen. Insert the appropriate Product Recovery disc when prompted.

Performing backup and recovery operations

The Rescue and Recovery program enables you to back up all your hard disk drive contents including the operating system, data files, software programs, and personal settings. You can designate where the Rescue and Recovery program stores the backup:

- In a protected area of your hard disk drive
- On the secondary hard disk drive if a secondary hard disk drive is installed in your computer
- On an attached external USB hard disk drive
- On a network drive
- On recordable discs (a recordable optical drive is required for this option)

After you have backed up the contents on the hard disk drive, you can restore the complete contents of the hard disk drive, restore only the selected files, or restore only the Windows operating system and applications.

Performing a backup operation

This section provides instructions on how to perform a backup operation using the Rescue and Recovery program on different operating systems.

- To perform a backup operation using the Rescue and Recovery program on the Windows 7 operating system, do the following:
  1. From the Windows desktop, click **Start → All Programs → Lenovo ThinkVantage Tools → Enhanced Backup and Restore**. The Rescue and Recovery program opens.
  2. In the Rescue and Recovery main window, click the **Launch advanced Rescue and Recovery** arrow.
  3. Click **Back up your hard drive** and select backup operation options. Then, follow the instructions on the screen to complete the backup operation.
- To perform a backup operation using the Rescue and Recovery program on the Windows Vista operating system or the Windows XP operating system, do the following:
  1. From the Windows desktop, click **Start → All Programs → ThinkVantage → Rescue and Recovery**. The Rescue and Recovery program opens.
  2. In the Rescue and Recovery main window, click **Launch advanced Rescue and Recovery → Back up your hard drive**, and select backup operation options.
  3. Follow the instructions on the screen to complete the backup operation.

Performing a recovery operation

This section provides instructions on how to perform a recovery operation using the Rescue and Recovery program on different operating systems.

- To perform a recovery operation using the Rescue and Recovery program on the Windows 7 operating system, do the following:

1. From the Windows desktop, click **Start → All Programs → Lenovo ThinkVantage Tools → Enhanced Backup and Restore**. The Rescue and Recovery program opens.
2. In the Rescue and Recovery main window, click the **Launch advanced Rescue and Recovery** arrow.
3. Click the **Restore your system from a backup** icon.
4. Follow the instructions on the screen to complete the recovery operation.

- To perform a recovery operation using the Rescue and Recovery program on the Windows Vista operating system or the Windows XP operating system, do the following:
  1. From the Windows desktop, click **Start → All Programs → ThinkVantage → Rescue and Recovery**. The Rescue and Recovery program opens.
  2. In the Rescue and Recovery main window, click **Launch advanced Rescue and Recovery**.
  3. Click the **Restore your system from a backup** icon.
  4. Follow the instructions on the screen to complete the recovery operation.

For more information about performing a recovery operation from the Rescue and Recovery workspace, see "Using the Rescue and Recovery workspace" on page 110.

Using the Rescue and Recovery workspace

The Rescue and Recovery workspace resides in a protected, hidden area of your hard disk drive that operates independently from the Windows operating system. This enables you to perform recovery operations even if you cannot start the Windows operating system. You can perform the following recovery operations from the Rescue and Recovery workspace:

- **Rescue files from your hard disk drive or from a backup** The Rescue and Recovery workspace enables you to locate files on your hard disk drive and transfer them to a network drive or other recordable media, such as a USB device or a disc. This solution is available even if you did not back up your files or if changes were made to the files since your last backup operation. You can also rescue individual files from a Rescue and Recovery backup located on your local hard disk drive, a USB device, or a network drive.
- **Restore your hard disk drive from a Rescue and Recovery backup** If you have backed up your hard disk drive using the Rescue and Recovery program, you can restore the hard disk drive from a Rescue and Recovery backup, even if you cannot start the Windows operating system.
- **Restore your hard disk drive to the factory default settings** The Rescue and Recovery workspace enables you to restore the complete contents of your hard disk drive to the factory default settings. If you have multiple partitions on your hard disk drive, you have the option to restore the factory default settings to the C: partition and leave the other partitions intact. Because the Rescue and Recovery workspace operates independently from the Windows operating system, you can restore the factory default settings even if you cannot start the Windows operating system.

Attention: If you restore the hard disk drive from a Rescue and Recovery backup or restore the hard disk drive to the factory default settings, all files on the primary hard disk drive partition (usually drive C:) will be deleted in the recovery process. If possible, make copies of important files. If you are unable to start the Windows operating system, you can use the rescue files feature of the Rescue and Recovery workspace to copy files from your hard disk drive to other media.

To start the Rescue and Recovery workspace, do the following:

1. Make sure the computer is turned off.
2. Repeatedly press and release the F11 key when turning on the computer. When you hear beeps or see a logo screen, release the F11 key.
3. If you have set a Rescue and Recovery password, type your password when prompted. The Rescue and Recovery workspace opens after a short delay.

Note: If the Rescue and Recovery workspace fails to open, see “Solving recovery problems” on page 113.

4. Do one of the following:
   - To rescue files from your hard disk drive or from a backup, click **Rescue files** and follow the instructions on the screen.
   - To restore your hard disk drive from a Rescue and Recovery backup or to restore your hard disk drive to the factory default settings, click **Restore your system** and follow the instructions on the screen.

For more information about the features of the Rescue and Recovery workspace, click **Help**.

Notes:

1. After restoring your hard disk drive to the factory default settings, you might have to reinstall device drivers for some devices. See “Reinstalling preinstalled applications and device drivers” on page 112.
2. Some computers come with Microsoft Office or Microsoft Works preinstalled. If you need to recover or reinstall your Microsoft Office or Microsoft Works applications, you must use the *Microsoft Office CD* or *Microsoft Works CD*. These discs are provided only with computers preinstalled with Microsoft Office or Microsoft Works.

Creating and using a rescue medium

With a rescue medium, such as a disc or a USB hard disk drive, you can recover the computer from failures that prevent you from gaining access to the Rescue and Recovery workspace on your hard disk drive.

Notes:

1. The recovery operations you can perform using a rescue medium vary depending on the operating system.
2. The rescue disc can be started in all types of optical drives.

Creating a rescue medium

This section provides instructions on how to create a rescue medium on different operating systems.

- To create a rescue medium on the Windows 7 operating system, do the following:
  1. From the Windows desktop, click **Start** → **All Programs** → **Lenovo ThinkVantage Tools** → **Enhanced Backup and Restore**. The Rescue and Recovery program opens.
  2. In the Rescue and Recovery main window, click the **Launch advanced Rescue and Recovery** arrow.
  3. Click the **Create Rescue Media** icon. The Create Rescue and Recovery Media window opens.
  4. In the **Rescue Media** area, select the type of the rescue medium you want to create. You can create a rescue medium using a disc, a USB hard disk drive, or a secondary internal hard disk drive.
  5. Click **OK** and follow the instructions on the screen to create a rescue medium.
- To create a rescue medium on the Windows Vista operating system or the Windows XP operating system, do the following:
  1. From the Windows desktop, click **Start** → **All Programs** → **ThinkVantage** → **Create Recovery Media**. The Create Rescue and Recovery Media window opens.
  2. In the **Rescue Media** area, select the type of the rescue medium you want to create. You can create a rescue medium using a disc, a USB hard disk drive, or a secondary internal hard disk drive.
  3. Click **OK** and follow the instructions on the screen to create a rescue medium.

Using a rescue medium

This section provides instructions on how to use the rescue medium you have created.

- If you have created a rescue medium using a disc, use the following instructions to use the rescue medium:
  1. Turn off your computer.
  2. Repeatedly press and release the F12 key when turning on the computer. When the **Startup Device Menu** opens, release the F12 key.
  3. On the **Startup Device Menu**, select the desired optical drive as the first boot device. Then, insert the rescue disc into the optical drive and press Enter. The rescue medium starts.
- If you have created a rescue medium using a USB hard disk drive, use the following instructions to use the rescue medium:
  1. Attach the USB hard disk drive to one of the USB connectors on your computer.
  2. Repeatedly press and release the F12 key when turning on the computer. When the **Startup Device Menu** opens, release the F12 key.
  3. On the **Startup Device Menu**, select the USB hard disk drive as the first boot device and press Enter. The rescue medium starts.
- If you have created a rescue medium using the secondary internal hard disk drive, set the secondary internal hard disk drive as the first boot device in the startup device sequence to start the rescue medium. See “Startup menu” on page 184.

When the rescue medium starts, the Rescue and Recovery workspace opens. The help information for each feature is available from the Rescue and Recovery workspace. Follow the instructions to complete the recovery process.

Reinstalling preinstalled applications and device drivers

Your computer has provisions that enable you to reinstall selected factory-installed applications and device drivers.

Reinstalling preinstalled applications

To reinstall selected application programs, do the following:

1. Turn on your computer.
2. Use Windows Explorer or Computer (in Windows XP, My Computer) to display the directory structure of your hard disk.
3. Open the `C:\SWTOOLS` folder.
4. Open the APPS folder. In it are several subfolders named for the various preinstalled applications.
5. Open the subfolder for the application you are reinstalling.
6. Double-click **Setup**, and then follow the on-screen steps to reinstall the program.

Reinstalling preinstalled device drivers

Attention: When you reinstall device drivers, you are changing the current configuration of your computer. Reinstall device drivers only when it is necessary to correct a problem with your computer.

To reinstall a device driver for a factory-installed device, do the following:

1. Turn on your computer.
2. Use Windows Explorer or Computer (in Windows XP, My Computer) to display the directory structure of your hard disk drive.
3. Open the `C:\SWTOOLS` folder.
4. Open the DRIVERS folder. Within the DRIVERS folder are several subfolders named for the various devices installed in your computer (for example, AUDIO and VIDEO).

5. Open the subfolder for the device.
6. Reinstall the device driver using one of the following methods:
   - In the subfolder for the device, look for a text file (a file with the extension .txt). The text file contains information on how to reinstall that device driver.

     -OR-
   - If the subfolder for the device contains a file of setup information (a file with the extension .inf), you can use the Add New Hardware program (in the Windows Control Panel) to reinstall the device driver. Not all device drivers can be reinstalled by use of this program. In the Add New Hardware program, when prompted for the device driver you want to install, click **Have Disk** and **Browse**. Then select the device driver file from the device subfolder.

     -OR-
   - In the subfolder for the device, look for the file for the application (a file with the extension .exe). Double-click the file, and follow the instructions on the screen.

Attention: If you need updated device drivers, do not download them from the Windows Update Web site. Obtain them from Lenovo. For more information, see “Making sure device drivers are current” on page 202.

Solving recovery problems

If you are unable to access the Rescue and Recovery workspace or the Windows environment, do one of the following:

- Use a rescue medium to start the Rescue and Recovery workspace. See “Using a rescue medium” on page 111.
- Use recovery media if all other methods of recovery have failed and you need to restore the hard disk drive to the factory default settings. See “Using recovery media” on page 108.

Note: If you are unable to access the Rescue and Recovery workspace or the Windows environment from a rescue medium or recovery media, you might not have the rescue device (an internal hard disk drive, a disc, a USB hard disk drive, or other external devices) set as the first boot device in the startup device sequence. You must first make sure that your rescue device is set as the first boot device in the startup device sequence in the Setup Utility program. See “Startup menu” on page 184 for detailed information about temporarily or permanently changing the startup device sequence. For more information about the Setup Utility program, see “ThinkPad Setup” on page 181.

It is important to create a rescue medium and a set of recovery media as early as possible and store them in a safe place for future use.

Chapter 6. Replacing devices

You can increase the capacity of the memory or the hard disk drive by replacing the original, built-in device with an optional one. Or, if you need to, you can replace the PCI Express Mini Card by following the procedures in this section.

- “Static electricity prevention” on page 115
- “Replacing the battery” on page 116
- “Replacing the hard disk drive” on page 125
- “Replacing the keyboard” on page 118
- “Replacing memory” on page 143
- “Installing and replacing the mSATA solid state drive” on page 141
- “Installing and replacing the PCI Express Mini Card for wireless LAN/WiMAX connection” on page 131
- “Installing and replacing the PCI Express Mini Card for wireless WAN connection” on page 137
- “Replacing the SIM card” on page 146
- “Replacing the solid state drive” on page 128

Static electricity prevention

Static electricity, although harmless to you, can seriously damage computer components and options. Improper handling of static-sensitive parts can cause damage to the part. When you unpack an option or CRU, do not open the static-protective package containing the part until the instructions direct you to install it.

When you handle options or CRUs, or perform any work inside the computer, take the following precautions to avoid static-electricity damage:

- Limit your movement. Movement can cause static electricity to build up around you.
- Always handle components carefully. Handle adapters, memory modules, and other circuit boards by the edges. Never touch exposed circuitry.
- Prevent others from touching components.
- When you install a static-sensitive option or CRU, touch the static-protective package containing the part to a metal expansion-slot cover or other unpainted metal surface on the computer for at least two seconds. This reduces static electricity in the package and your body.
- When possible, remove the static-sensitive part from the static-protective packaging and install the part without setting it down. When this is not possible, place the static-protective packaging on a smooth, level surface and place the part on it.
- Do not place the part on the computer cover or other metal surface.

© Copyright Lenovo 2011

Replacing the battery

Before you start, print these instructions.

This system may not support batteries that are not genuine Lenovo-made or authorized. These systems will continue to boot, but may not charge unauthorized batteries.

Attention: Lenovo has no responsibility for the performance or safety of unauthorized batteries, and provides no warranties for failures or damage arising out of their use.

To replace the battery with a new one, read the following prerequisites, and select your model from the list below for the instruction.

Prerequisites for the procedure

DANGER

If the rechargeable battery pack is incorrectly replaced, there is danger of an explosion. The battery pack contains a small amount of harmful substances. To avoid possible injury:

- **Replace only with a battery of the type recommended by Lenovo.**
- **Keep the battery pack away from fire.**
- **Do not expose it to excessive heat.**
- **Do not expose it to water or rain.**
- **Do not short-circuit it.**
- **Do not drop, crush, puncture, or subject to strong forces. Battery abuse or mishandling can cause the battery to overheat, which can cause gasses or flame to “vent” from the battery pack or coin cell.**

To replace the battery, follow the procedures below.

Replacing the battery installed in the battery space of your computer

1. Turn off the computer, or enter hibernation mode. Then disconnect the ac power adapter and all cables from the computer.
2. Close the computer display, and turn the computer over.

3. Unlock the battery latch by sliding it to the unlock position.

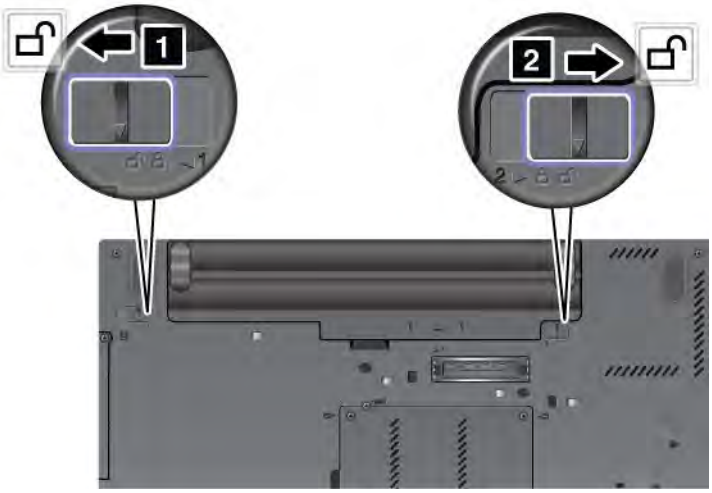

4. Remove the battery.

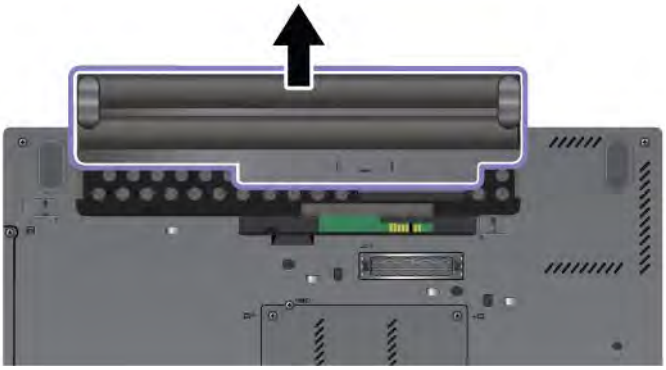

5. Slide the battery into the computer.

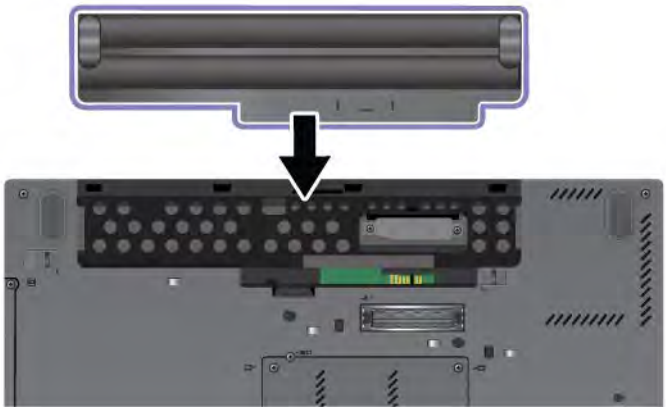

6. Slide the battery latch to the locked position.

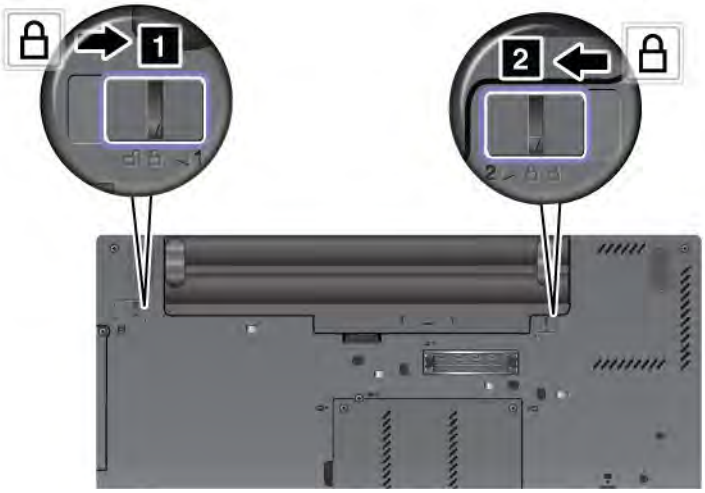

7. Turn the computer over again. Connect the ac power adapter and the cables to the computer.

Replacing the keyboard

Before you start, print these instructions.

You can use the following procedures to replace the keyboard with a new one, available as an option.

Prerequisites for the procedure

DANGER

During electrical storms, do not connect the cable to or disconnect it from the telephone outlet on the wall.

DANGER

Electric current from power, telephone, and communication cables is hazardous. To avoid shock hazard, disconnect the cables before opening the cover of this slot.

To replace the keyboard, do as follows.

Removing the keyboard

1. Turn off the computer; then disconnect the ac power adapter and all cables from the computer. Wait for a few minutes, till the inside of the computer cools, before you start the following procedures.
2. Close the computer display, and turn the computer over.
3. Remove the battery. For details, refer to the instructions in “Remove the battery” on page 116.

4. Loosen the two screws on the memory slot cover , then remove the cover.

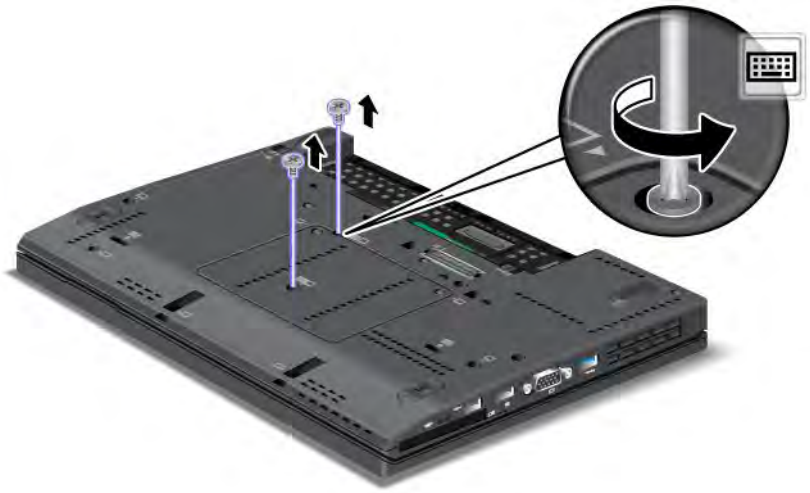

5. Turn the computer over and open the display.
6. Push hard in the direction shown by the arrows **1** in the drawing to unlatch the front side of the keyboard. The keyboard will open up slightly **2**.

7. Carefully lift the keyboard until you can see how it's connected. Hold the keyboard above the computer **1**, and then detach the connector **2**. Now the keyboard has been removed.

Installing the keyboard

1. Attach the connector.

2. Insert the keyboard. Make sure that the rear edges of the keyboard are under the frame as shown by the arrows.

3. Press gently on the areas marked in the drawing, and slide the keyboard toward you. Make sure that the edges of the keyboard marked in the drawing, are under the frame.

4. Put the memory slot cover back in place , close the cover , and then tighten the screws.

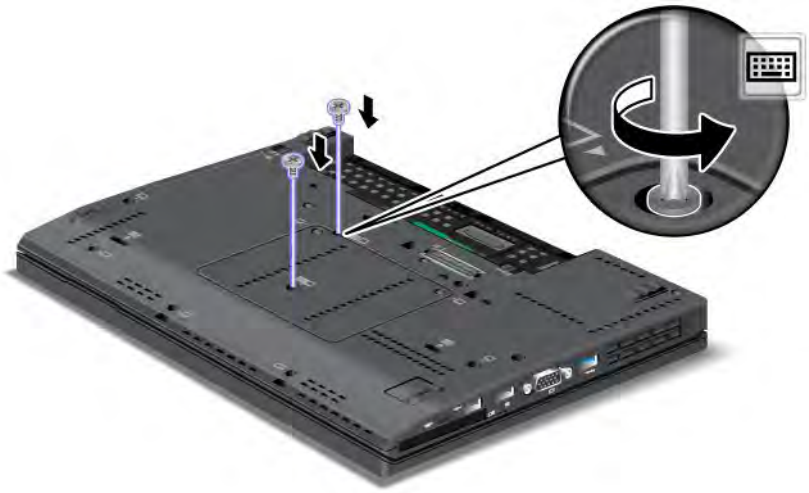

5. Reinstall the battery. For details, refer to the instructions in “Reinstall the battery” on page 116.
6. Turn the computer over again. Connect the ac power adapter and cables to the computer; then turn it on.

Replacing the palm rest

Before you start, print these instructions.

Prerequisites for the procedure

DANGER

During electrical storms, do not connect the cable to or disconnect it from the telephone outlet on the wall.

DANGER

Electric current from power, telephone, and communication cables is hazardous. To avoid shock hazard, disconnect the cables before opening the cover of this slot.

Replacement instructions

1. Turn off the computer; then disconnect the ac power adapter and all cables from the computer. Wait for a few minutes, till the inside of the computer cools, before you start the following procedures.
2. Close the computer display, and turn the computer over.
3. Remove the battery. For more information, refer to Replacing the battery.
4. Remove the keyboard. For more information about how to remove the keyboard, refer to Replacing the keyboard.
5. Remove the screws that secure the palm rest.

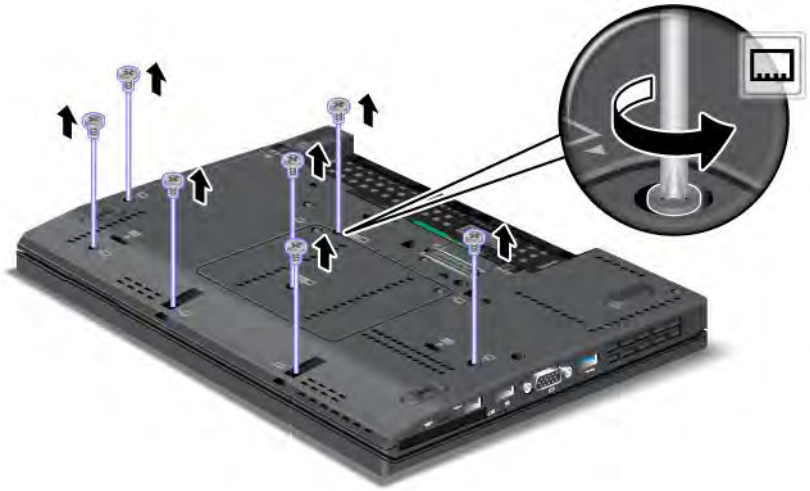

6. Turn the computer over and open the display. Lift up the left and right top edges of the palm rest to remove it.
7. Detach the flip-lock ZIF connector **1**, then remove the palm rest cable **2**.

8. Lift up and remove the palm rest.

9. Release the palm rest from the computer. Now the palm rest has been removed.

Installing the palm rest

1. Attach the palm rest, making sure the latches near the top left and right edges of the palm rest are secure.

2. Push the front side of the palm rest until it clicks into place.

3. Attach the flip-lock ZIF connector **1**, then push the palm rest cable **2**.

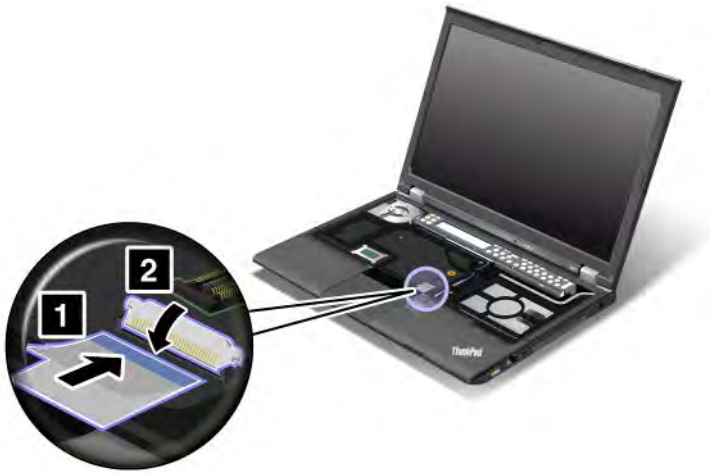

4. Reinstall the screws for the palm rest.

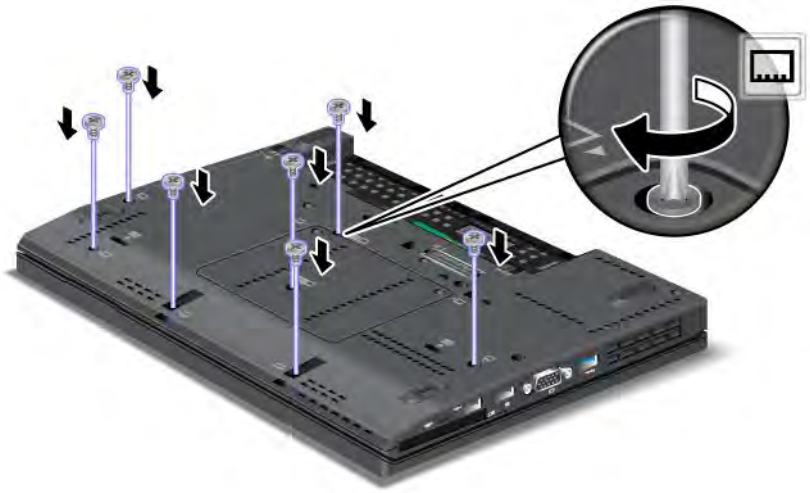

5. Reinstall the keyboard. For more information about how to remove the keyboard, refer to Replacing the keyboard.
6. Reinstall the battery. For more information, refer to Replacing the battery.
7. Turn the computer over again. Connect the ac power adapter and cables to the computer; then turn it on.

Replacing the hard disk drive

Before you start, print these instructions.

You can replace the hard disk drive with a new one which can be purchased from your Lenovo reseller or a marketing representative. To replace the hard disk drive, read the following prerequisites.

Note: Replace the hard disk drive only if you upgrade it or have it repaired. The connectors and slot of the hard disk drive were not designed for frequent changes, or drive swapping.

Prerequisites for the procedure

When replacing the drive, be sure to follow the precautions.

Attention: When you are handling a hard disk drive:

- Do not drop the drive or subject it to physical shocks. Put the drive on a material, such as soft cloth, that absorbs any physical shocks.
- Do not apply pressure to the cover of the drive.
- Do not touch the connector.

The drive is very sensitive. Incorrect handling can cause damage and permanent loss of data.

Before removing the hard disk drive, make a backup copy of all the information on it, and then turn the computer off.

Never remove the drive while the system is operating, in sleep (standby) mode, or in hibernation mode.

To replace the hard disk drive, do as follows:

1. Turn off the computer; then disconnect the ac power adapter and all cables from the computer.
2. Close the computer display, and turn the computer over.
3. Remove the battery. For details, refer to the instructions in “Remove the battery” on page 116.
4. Remove the screw that secures the slot cover **1**. Then flip out the cover **2** and pull up to remove it **3**.

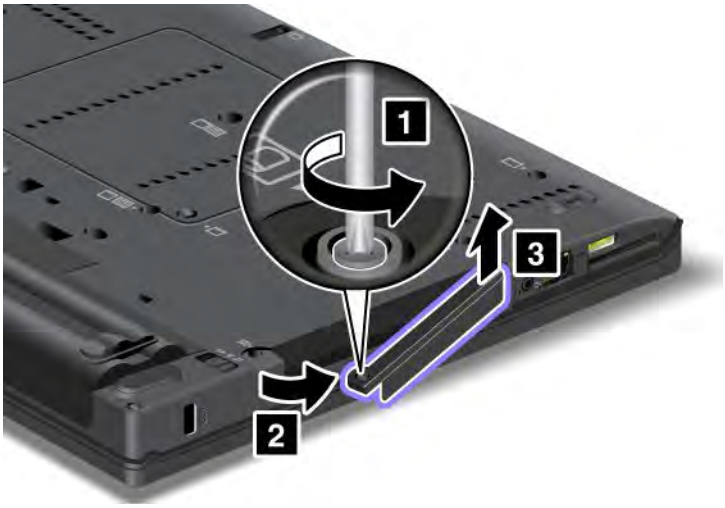

5. Remove the hard disk drive by pulling out the tab.

6. Detach the side rubber rails from the hard disk drive.

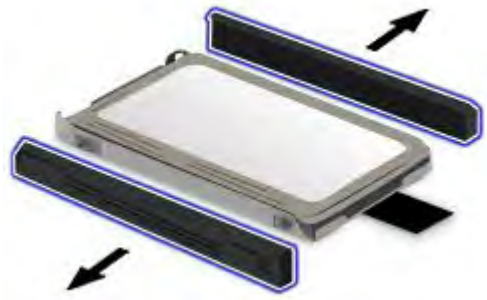

7. Attach the side rubber rails to a new hard disk drive.

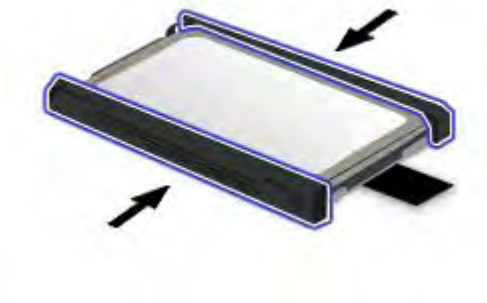

8. Insert the hard disk drive into the hard disk drive bay, then press it firmly into place.

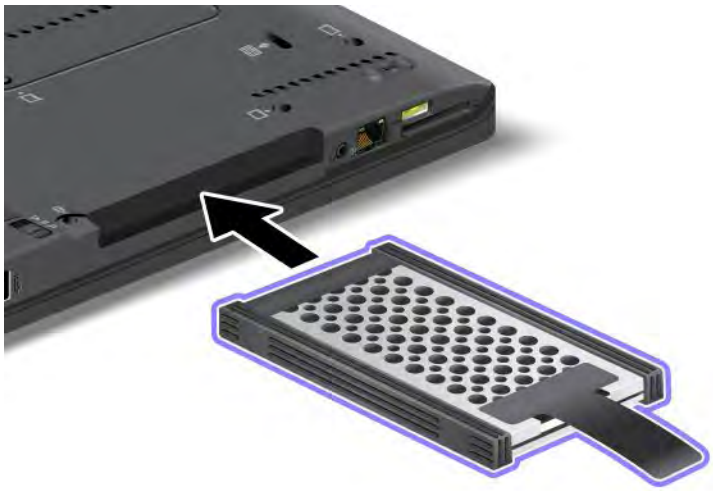

9. Insert the slot cover 1. Then, slide in the cover 2 and reinstall the screw 3.

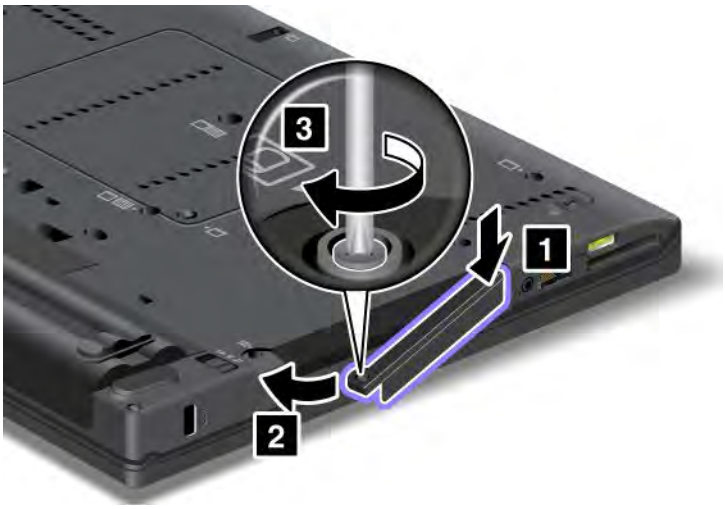

10. Reinstall the battery. For details, refer to the instructions in “Reinstall the battery” on page 116.
11. Turn the computer over again. Connect the ac power adapter and the cables to the computer.

Replacing the solid state drive

You can replace the solid state drive with a new one which can be purchased from your Lenovo reseller or a marketing representative. To replace the solid state drive, read the following prerequisites and select your model from the list below for instructions.

Note: Replace the solid state drive only if you need to have it repaired. The connectors and slot of the solid state drive were not designed for frequent changes, or drive swapping.

Prerequisites for the procedure

When replacing the drive, be sure to follow the precautions.

Attention: When you are handling a solid state drive:

- Do not drop the drive or subject it to physical shocks. Put the drive on a material, such as soft cloth, that absorbs any physical shocks.
- Do not apply pressure to the cover of the drive.
- Do not touch the connector.

The drive is very sensitive. Incorrect handling can cause damage and permanent loss of data.

Before removing the solid state drive, make a backup copy of all the information on it, and then turn the computer off.

Never remove the drive while the system is operating, in sleep (standby) mode, or in hibernation mode.

Replacement instructions

To replace the solid state drive, do as follows:

1. Turn off the computer; then disconnect the ac power adapter and all cables from the computer.
2. Close the computer display, and turn the computer over.
3. Remove the battery. For more information, refer to “Replacing the battery” on page 116.

4. Remove the screw that secures the solid state drive **1**. Then flip out the cover **2** and pull up to remove it **3**.

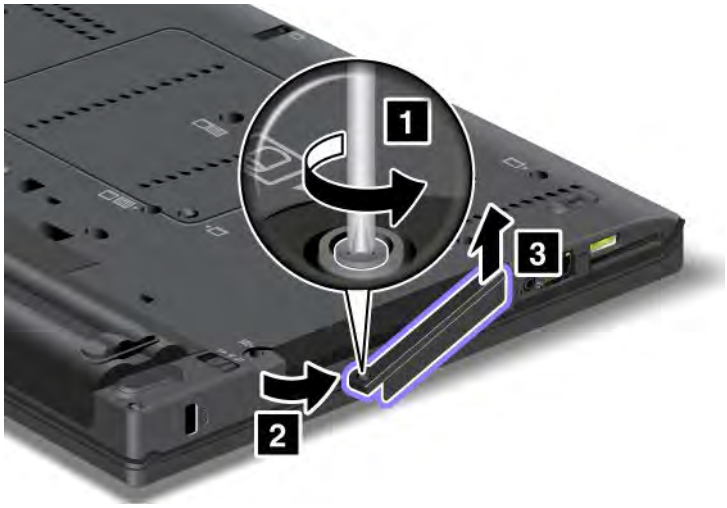

5. Remove the solid state drive by pulling out the tab.

6. Detach the side spacer rails from the hard disk drive.

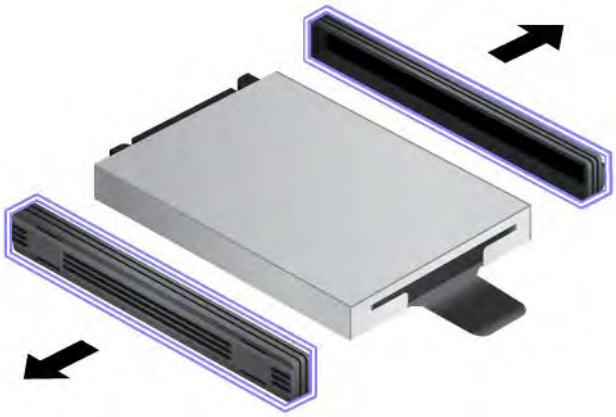

7. Attach the side spacer rails to a new hard disk drive.

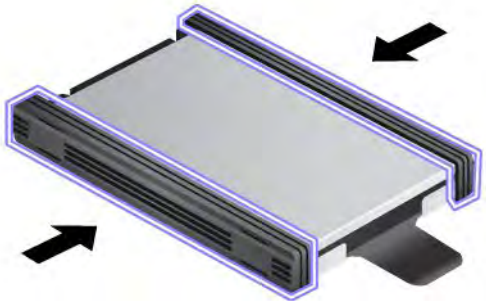

8. Insert the solid state drive into the hard disk drive bay, then press it firmly into place.

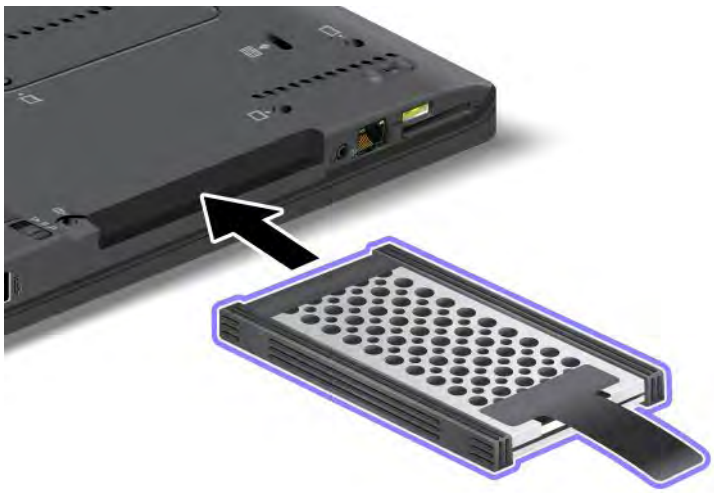

9. Reinstall the cover of the bay **1**, then reinstall the screw **2**.

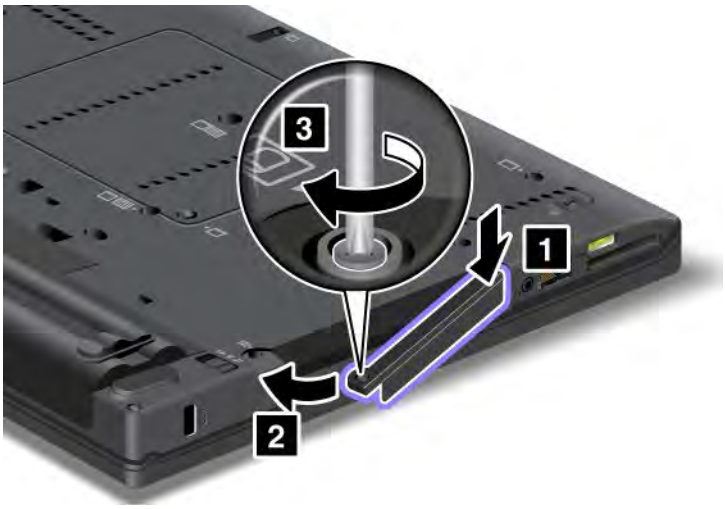

10. Reinstall the battery. For more information about how to reinstall the battery, refer to “Replacing the battery” on page 116.
11. Turn the computer over again. Connect the ac power adapter and the cables to the computer.

Installing and replacing the PCI Express Mini Card for wireless LAN/WiMAX connection

Before you start, print these instructions.

Your computer has a PCI Express Mini Card slot for connection to a wireless LAN/WiMAX. To replace the PCI Express Mini Card with a new one, read the following prerequisites.

Prerequisites for the procedure

DANGER

During electrical storms, do not connect the cable to or disconnect it from the telephone outlet on the wall.

DANGER

Electric current from power, telephone, and communication cables is hazardous. To avoid shock hazard, disconnect the cables before opening the cover of this slot.

Attention: Before you start installing a PCI Express Mini Card, touch a metal table or a grounded metal object. This action reduces any static electricity from your body. The static electricity could damage the card.

Your computer has a PCI Express Mini Card slot for connection to a wireless LAN/WiMAX. To replace the PCI Express Mini Card with a new one, follow the procedure below.

Replacing a PCI Express Mini Card with two connectors

1. Turn off the computer; then disconnect the ac power adapter and all cables from the computer. Wait for a few minutes, till the inside of the computer cools, before you start the following procedures.
2. Close the computer display, and turn the computer over.
3. Remove the battery. For details, refer to the instructions in “Remove the battery” on page 116.
4. Remove the palm rest. For details, refer to the instructions in “Remove the palm rest” on page 122.

5. If a tool for removing connectors is included in the package with the new card, use it to disconnect the cables from the card. If no such tool is included, disconnect the cables by picking up the connectors with your fingers and gently unplugging them.

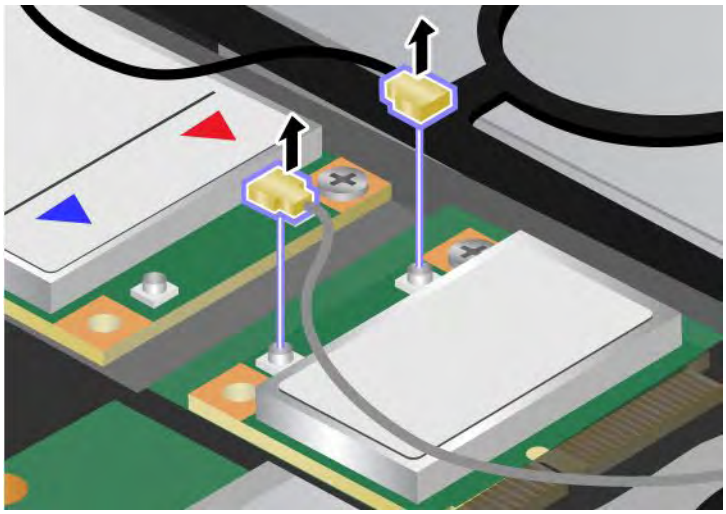

6. Remove the screw. The card pops up.

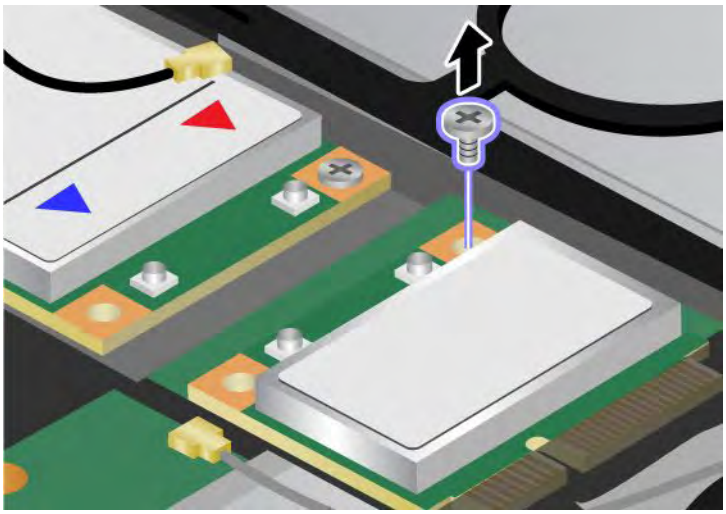

7. Remove the card.

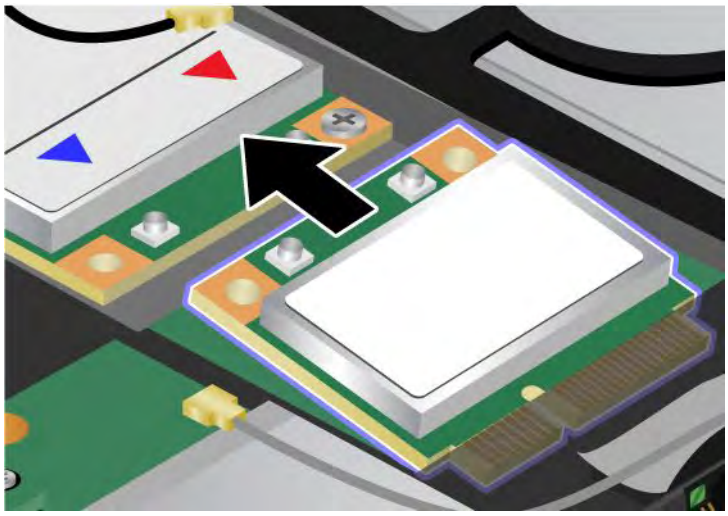

8. Align the contact edge of the new PCI Express Mini Card with the corresponding socket contact of the computer.

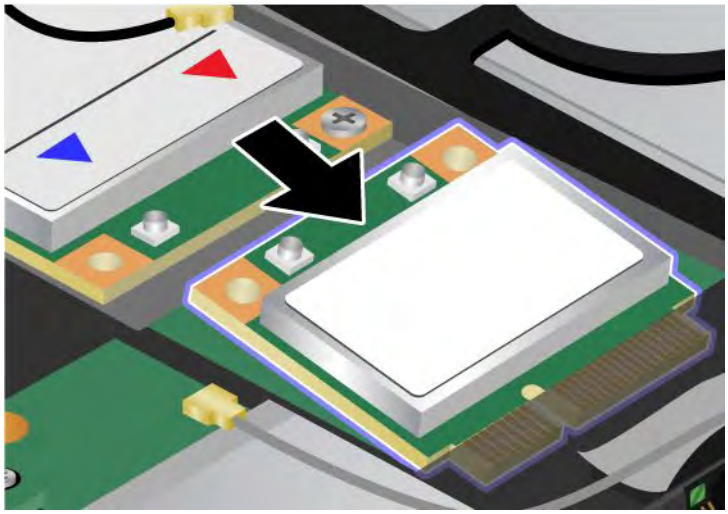

9. Pivot the card until you can snap it into place by pressing the upper side of the connectors **1**, and secure the card with the screw **2**.

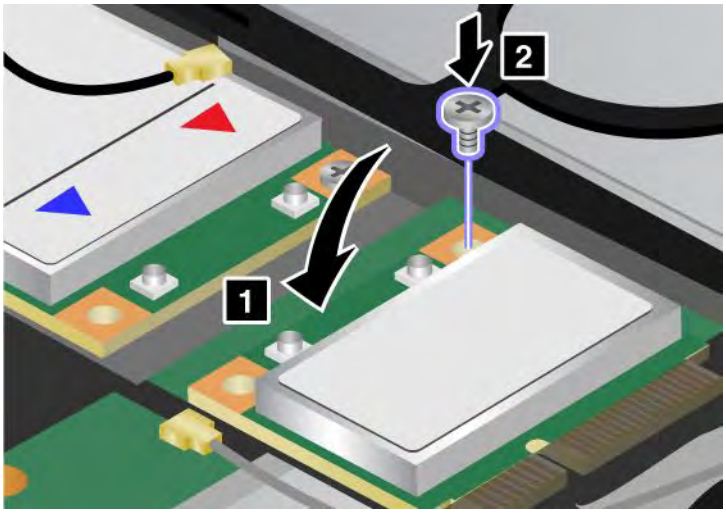

10. Connect the cables to the new PCI Express Mini Card. Be sure to attach the gray cable to the connector marked “MAIN” or “M” on the card, and the black cable to the connector marked “AUX” or “A.”

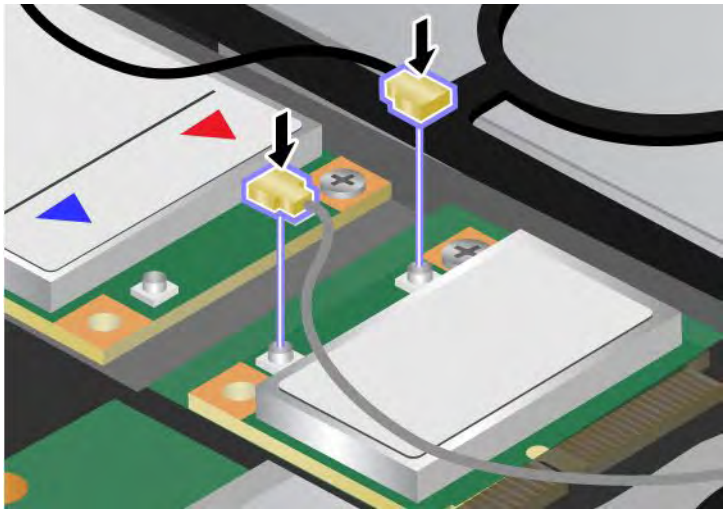

Note: If the new PCI Express Mini Card has three connectors, be sure to attach the gray cable to the connector marked “TR1” on the card, and the black cable to the connector marked “TR2”. If you attach either cable to the center connector, the connection speed will be lower.

11. Reinstall the palm rest. For details, refer to the instructions in “Reinstall the palm rest” on page 122.
12. Reinstall the battery. For details, refer to the instructions in “Reinstall the battery” on page 116.
13. Turn the computer over again. Connect the ac power adapter and cables to the computer; then turn it on.

Replacing a PCI Express Mini Card with three connectors

1. Turn off the computer; then disconnect the ac power adapter and all cables from the computer. Wait for a few minutes, till the inside of the computer cools, before you start the following procedures.
2. Close the computer display, and turn the computer over.
3. Remove the battery. For details, refer to the instructions in “Remove the palm rest” on page 122.
4. Remove the keyboard. For details, refer to the instructions in “Remove the keyboard” on page 118.

5. If a tool for removing connectors is included in the package with the new card, use it to disconnect the cables from the card. If no such tool is included, disconnect the cables by picking up the connectors with your fingers and gently unplugging them.

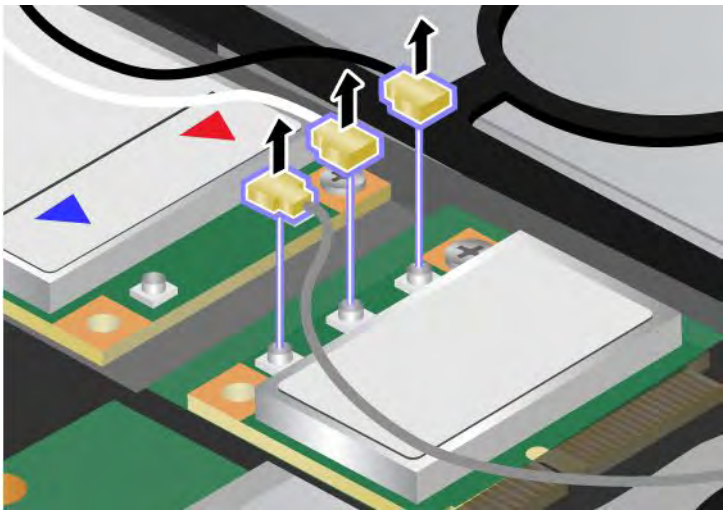

6. Remove the screw. The card pops up.

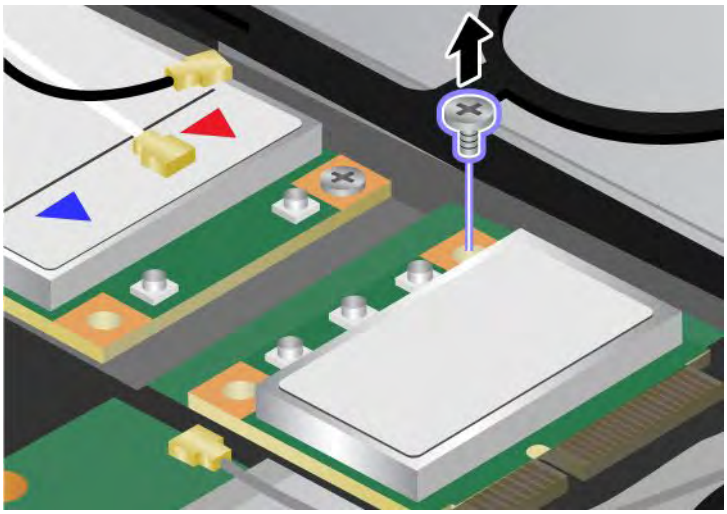

7. Remove the card.

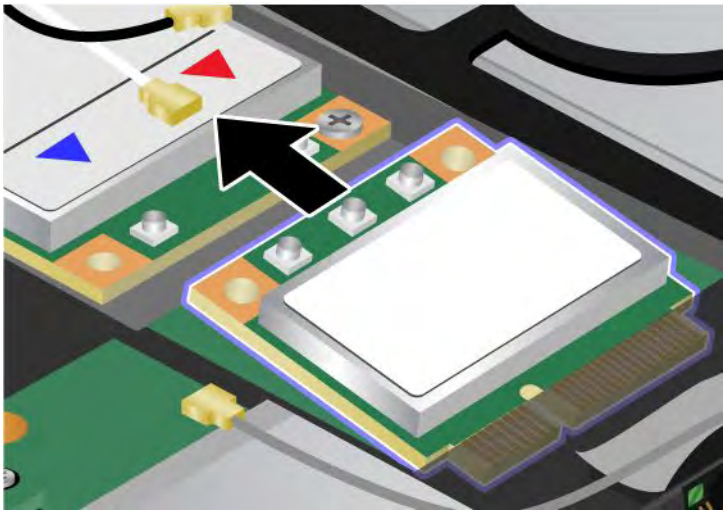

8. Align the contact edge of the new PCI Express Mini Card with the corresponding socket contact of the computer.

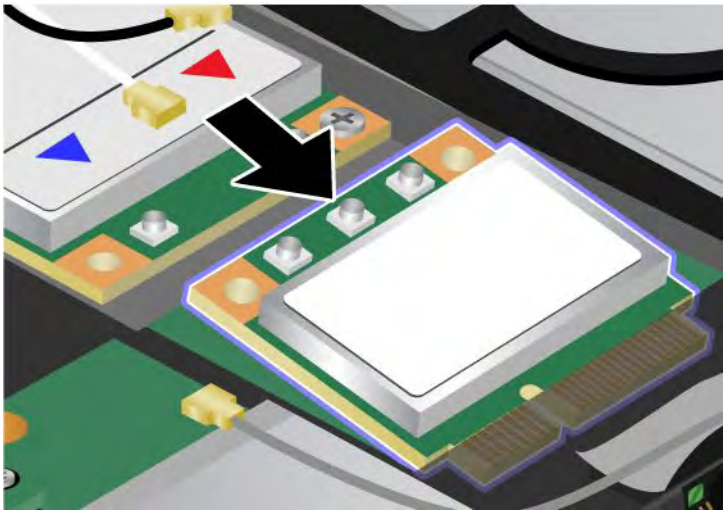

9. Pivot the card until you can snap it into place by pressing the upper side of the connectors 1, and secure the card with the screw 2.

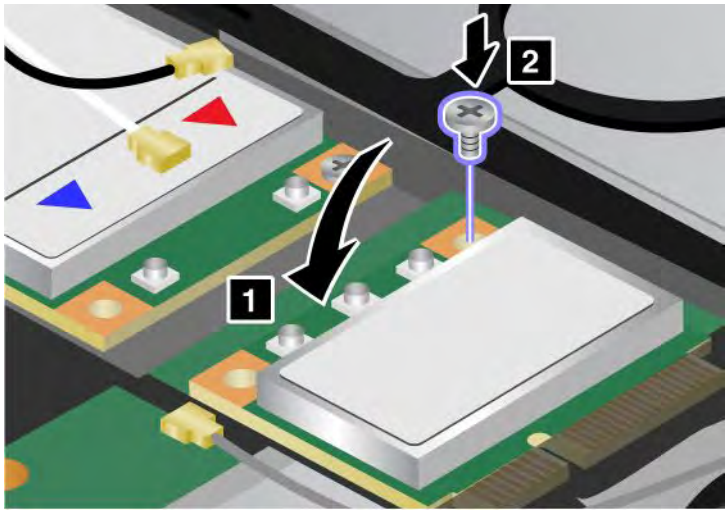

10. Connect the cables to the new PCI Express Mini Card. Be sure to attach the gray cable to the connector marked “MAIN” or “M” on the card, and the black cable to the connector marked “AUX” or “A.”

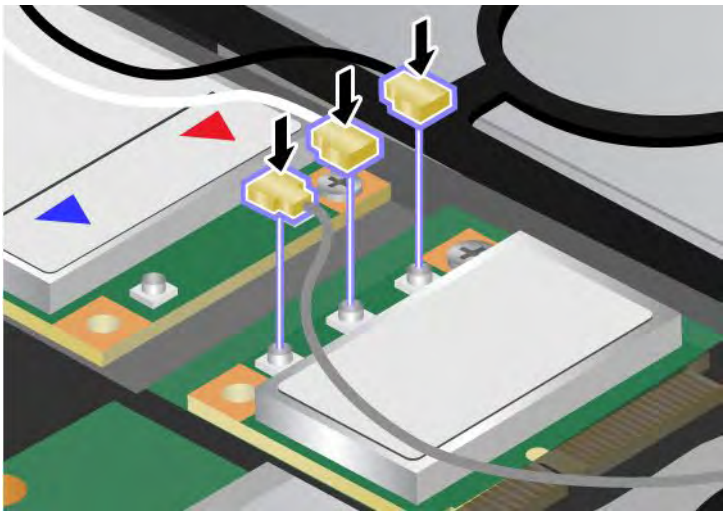

Note: If the new PCI Express Mini Card has three connectors, be sure to attach the gray cable to the connector marked “TR1” on the card, and the black cable to the connector marked “TR2”. If you attach either cable to the center connector, the connection speed will be lower.

11. Reinstall the keyboard. For details, refer to the instructions in “Reinstall the palm rest” on page 122.
12. Reinstall the battery. For details, refer to the instructions in “Reinstall the battery” on page 116.
13. Turn the computer over again. Connect the ac power adapter and cables to the computer; then turn it on.

Installing and replacing the PCI Express Mini Card for wireless WAN connection

Before you start, print these instructions.

Some ThinkPad models have a PCI Express Mini Card slot for connection to a wireless WAN. To replace the PCI Express Mini Card with a new one, read the following prerequisites.

Prerequisites for the procedure

DANGER

During electrical storms, do not connect the cable to or disconnect it from the telephone outlet on the wall.

DANGER

Electric current from power, telephone, and communication cables is hazardous. To avoid shock hazard, disconnect the cables before opening the cover of this slot.

Attention: Before you start installing a PCI Express Mini Card, touch a metal table or a grounded metal object. This action reduces any static electricity from your body. The static electricity could damage the card.

If a Wireless WAN is available in your computer, to replace the PCI Express Mini Card, do as follows.

1. Turn off the computer; then disconnect the ac power adapter and all cables from the computer. Wait for a few minutes, till the inside of the computer cools, before you start the following procedures.
2. Close the computer display, and turn the computer over.
3. Remove the battery. For details, refer to the instructions in “Remove the battery” on page 116.
4. Remove the palm rest. For details, refer to the instructions in “Remove the palm rest” on page 122.
5. If a tool for removing connectors is included in the package with the new card, use it to disconnect the cables from the card. If no such tool is included, disconnect the cables by picking up the connectors with your fingers and gently unplugging them.

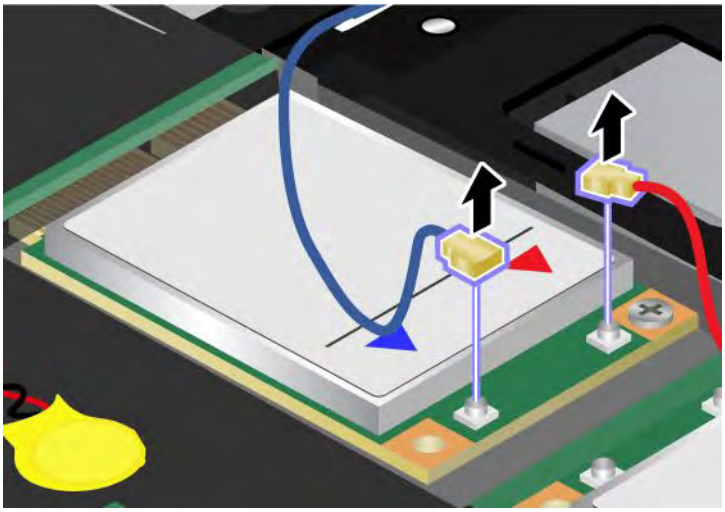

Note: Depending on the system configuration of your computer, the card may have only one connector.

6. Remove the screw. The card pops up.

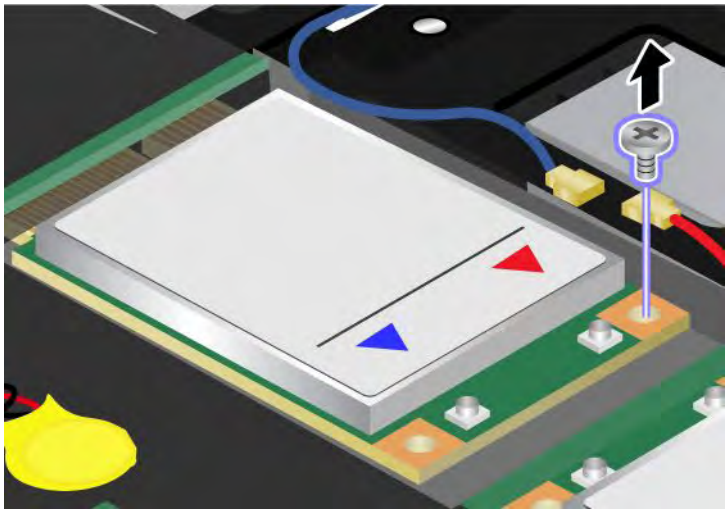

7. Remove the card.

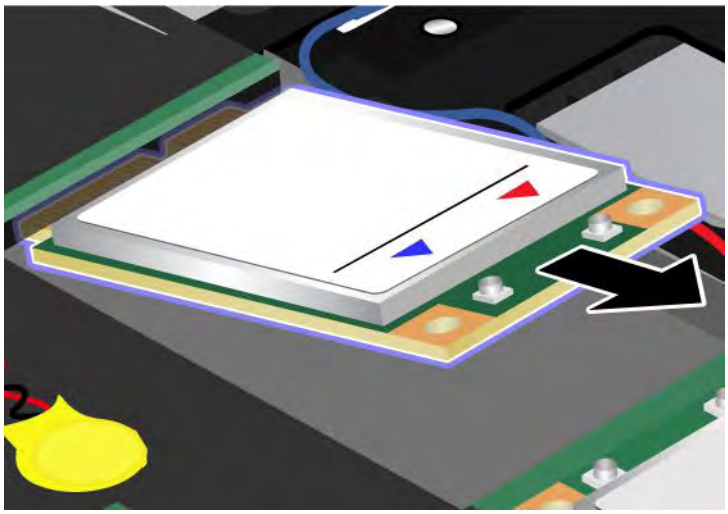

8. Align the contact edge of the new PCI Express Mini Card with the corresponding socket.

   Notes:

   - You can also replace the PCI Express Mini Card for Wireless WAN with an mSATA solid state drive.
   - To install a new mSATA solid state drive, refer to “Installing and replacing the mSATA solid state drive” on page 141.

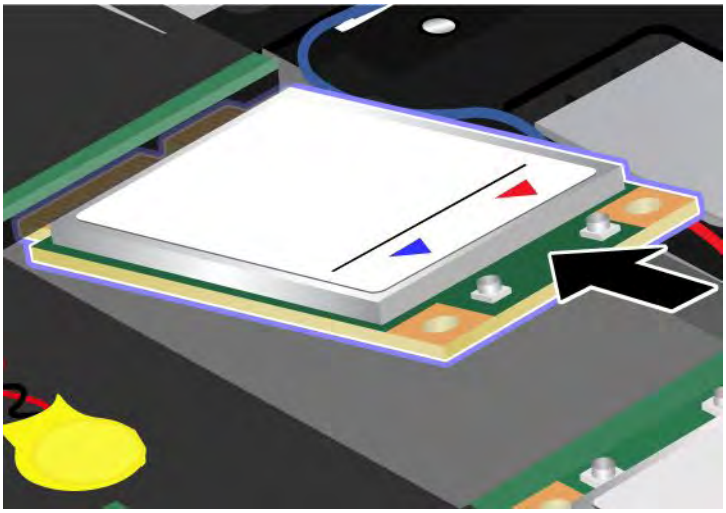

9. Pivot the card until you can snap it into place by pressing the upper side of each connector. Secure the card with the screw.

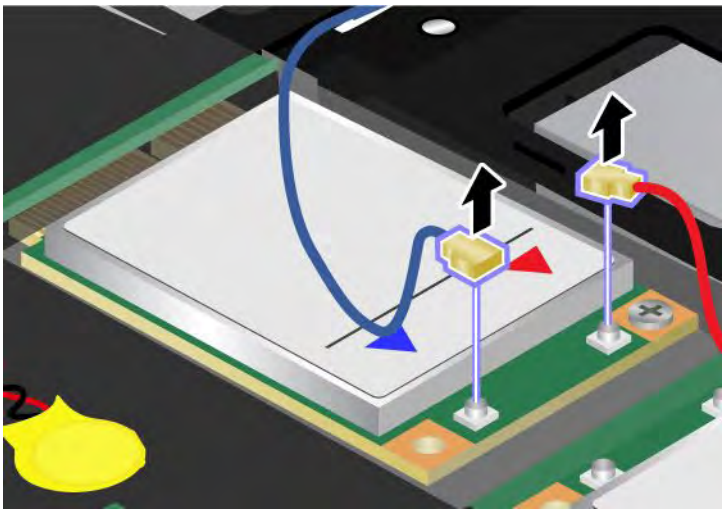

   Note: Depending on the system configuration of your computer, the card may have only one connector.

10. Connect the cables to the new PCI Express Mini Card.

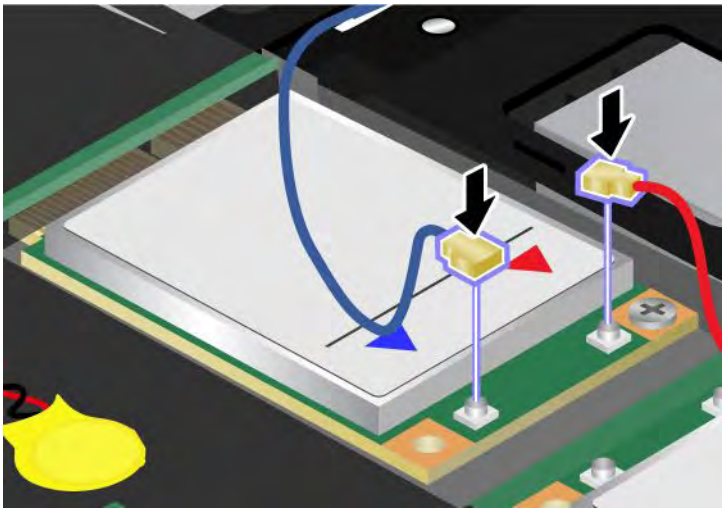

11. Reinstall the keyboard. For details, refer to the instructions in “Reinstall the palm rest” on page 122.
12. Reinstall the battery. For details, refer to the instructions in “Reinstall the battery” on page 116.
13. Turn the computer over again. Connect the ac power adapter and cables to the computer; then turn it on.

Installing and replacing the mSATA solid state drive

Before you start, print these instructions.

Some ThinkPad models have an mSATA solid state drive. You can replace the mSATA solid state drive with a new one which can be purchased from your Lenovo reseller or a marketing representative. To replace the mSATA solid state drive, read the following prerequisites.

Notes:

- You can also replace the mSATA solid state drive with a Wireless PCI Express Mini Card for Wireless WAN.
- Replace the mSATA solid state drive only if you need to have it repaired.

Prerequisites for the procedure

When replacing the mSATA solid state drive, be sure to follow the precautions.

Attention: When you are handling an mSATA solid state drive:

- Do not drop the mSATA solid state drive or subject it to physical shocks. Put the mSATA solid state drive on a material, such as soft cloth that absorbs any physical shocks.
- Do not apply pressure to the cover of the mSATA solid state drive.

The mSATA solid state drive is very sensitive. Incorrect handling can cause damage and permanent loss of data.

Before removing the mSATA solid state drive, make a backup copy of all the information on it, and then turn the computer off.

Never remove the mSATA solid state drive while the system is operating, in sleep (standby) mode, or in hibernation mode.

If an mSATA solid state drive is available in your computer, to replace the mSATA solid state drive, do as follows.

1. Turn off the computer; then disconnect the ac power adapter and all cables from the computer. Wait for a few minutes, till the inside of the computer cools, before you start the following procedures.
2. Close the computer display, and turn the computer over.
3. Remove the battery. For details, refer to the instructions in “Remove the battery” on page 116.
4. Remove the palm rest. For details, refer to the instructions in “Remove the palm rest” on page 122.
5. Remove the screw. The card pops up.

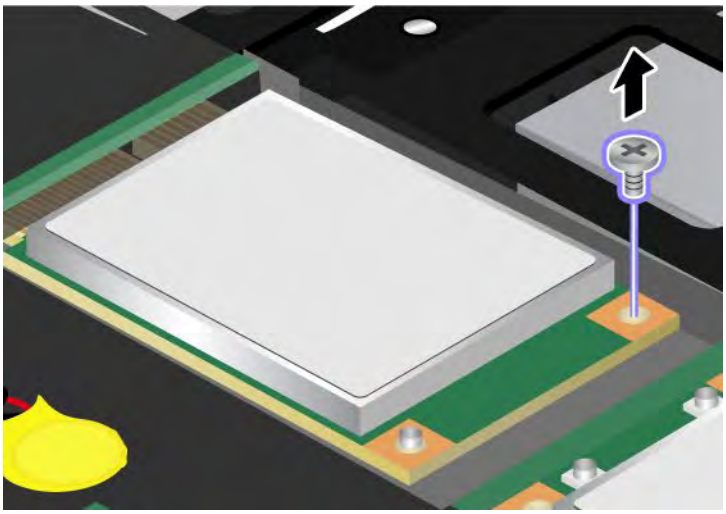

6. Remove the card.

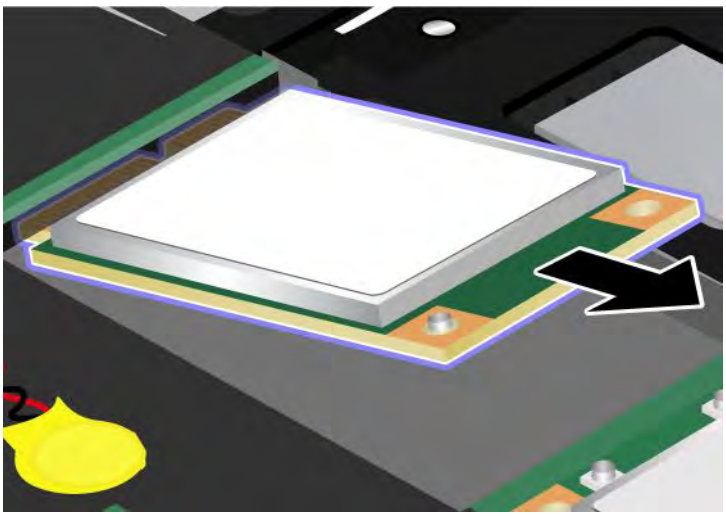

7. Align the contact edge of a new mSATA solid state drive with the corresponding socket.

   Notes:

   - You can also replace the mSATA solid state drive with a Wireless PCI Express Mini Card for Wireless WAN.
   - To install a new PCI Express Mini Card, refer to “Installing and replacing the PCI Express Mini Card for wireless WAN connection” on page 137.

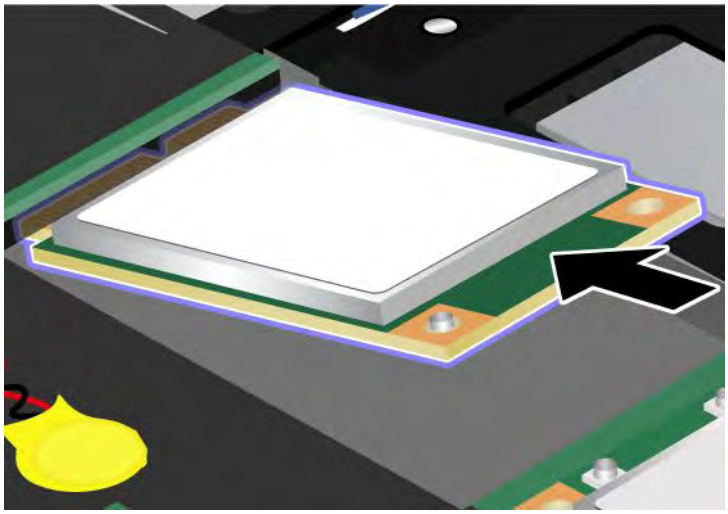

8. Pivot the card downward 1 until you can snap it into place. Secure the card with the screw 2.

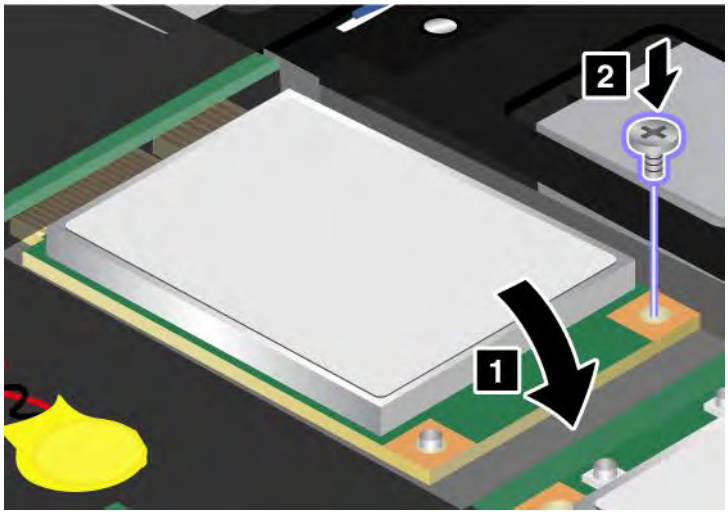

9. Reinstall the keyboard. For details, refer to the instructions in “Reinstall the palm rest” on page 122.
10. Reinstall the battery. For details, refer to the instructions in “Reinstall the battery” on page 116.
11. Turn the computer over again. Connect the ac power adapter and cables to the computer; then turn it on.

Replacing memory

Before you start, print these instructions.

Prerequisites for the procedure

When replacing the memory, be sure to follow the precautions:

Note: The operating speed of the memory module depends on the system configuration of your computer and its combination with the memory module installed on your computer. In some conditions, the memory in your computer may not be able to operate at the maximum speed.

Attention: Before you start installing a module, touch a metal table or a grounded metal object. This action reduces any static electricity from your body. The static electricity could damage the SO-DIMM.

To replace the SO-DIMM, do the following:

1. Turn off the computer; then disconnect the ac power adapter and all cables from the computer.
2. Close the computer display, and turn it over.
3. Remove the battery. Refer to “Replacing the battery” on page 116 for details about how to replacing the battery.
4. Loosen the screws on the memory slot cover 1, then remove the cover 2.

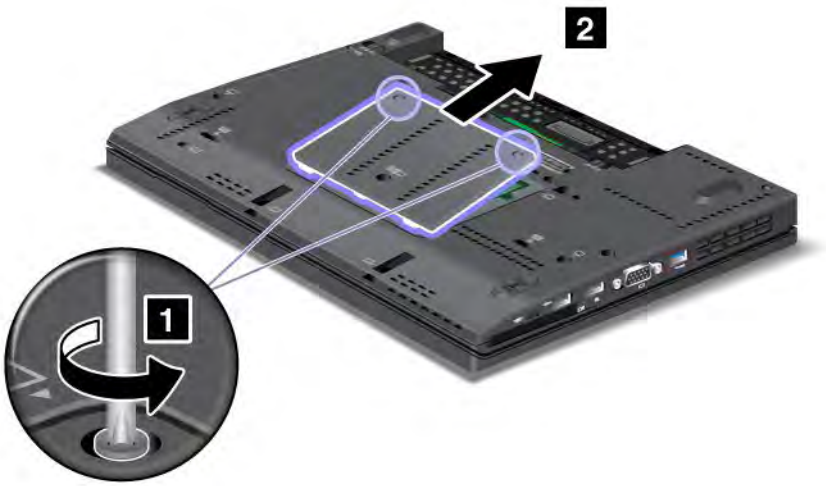

If the two SO-DIMMs are already in the memory slots, remove an SO-DIMM to make room for the new one by pressing out on the latches on both edges of the socket at the same time 1. Be sure to save it for future use 2.

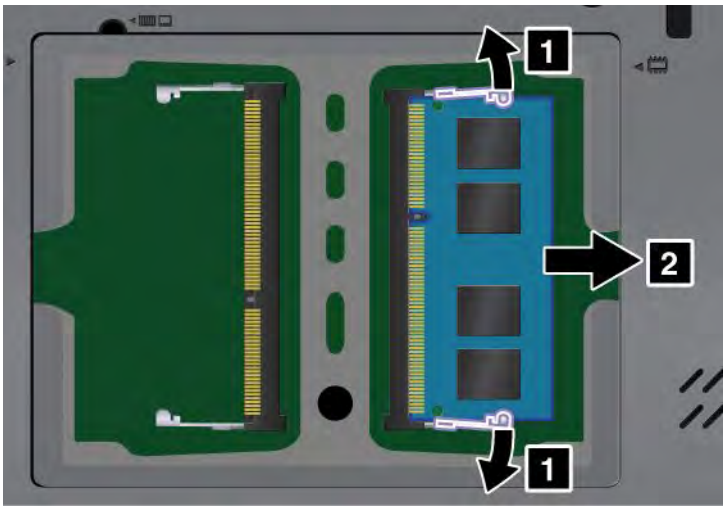

5. Find the notch on the contact edge side of the SO-DIMM you are installing.

   Attention: To avoid damaging the SO-DIMM, do not touch its contact edge.

6. With the notched end of the SO-DIMM toward the contact edge side of the socket, insert the SO-DIMM into the socket at an angle of about 20 degrees 1; then press it in firmly 2.

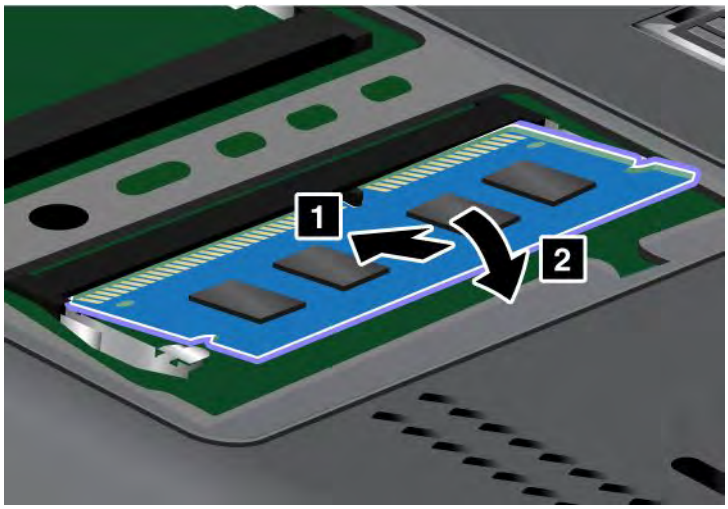

Note: If you install a memory module in only one of the two memory slots, install it in the lower slot.

7. Pivot the SO-DIMM downward until it snaps into place.
8. Make sure that the SO-DIMM is firmly fixed in the slot and cannot be moved easily.
9. Put the memory slot cover back in place 1, close the cover, and tighten the screws 2.

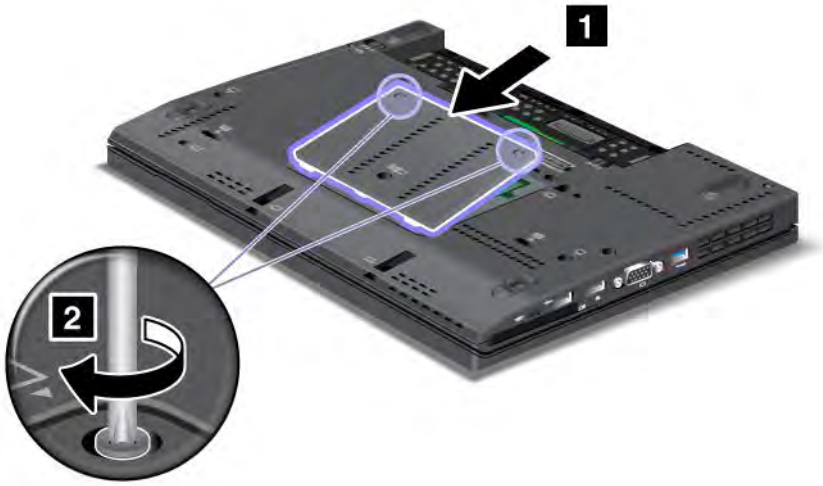

10. Put the battery back in place, turn the computer over again, and reconnect the cables. For information about how to replace the battery, refer to “Replacing the battery” on page 116.

To make sure that the SO-DIMM is installed correctly, do as follows:

1. Turn the computer on.

2. When the logo screen is displayed, press the F1 key. The ThinkPad Setup opens. The “Installed memory” item shows the total amount of memory installed in your computer.

Replacing the SIM card

Before you start, print these instructions.

Your computer may require a SIM (Subscriber Identification Module) card to establish a wireless WAN (Wide Area Network) connections. Depending on the country of delivery, the SIM card may be already installed in your computer or will be part of the shipping contents that came with your computer.

If you find the SIM cards included in the shipping contents, a dummy card is installed in the SIM card slot. Then proceed to the following instructions.

If you find the dummy card in the shipping contents, the SIM card is already installed in the SIM card slot, and no further installation is needed.

Note: The SIM card is identified by the IC chip mounted on one side of the card.

To replace the SIM card, do as follows.

1. Turn off the computer; then disconnect the ac power adapter and all cables from the computer.
2. Close the computer display, and turn it over.
3. Remove the battery. For details, refer to the instructions in “Remove the battery” on page 116.
4. Find the SIM card slot inside the open battery compartment. Remove the card.

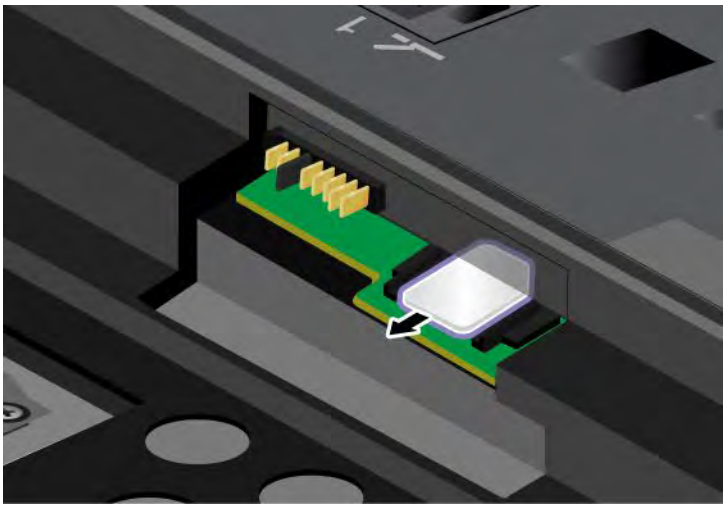

5. Insert the SIM card firmly into the slot.

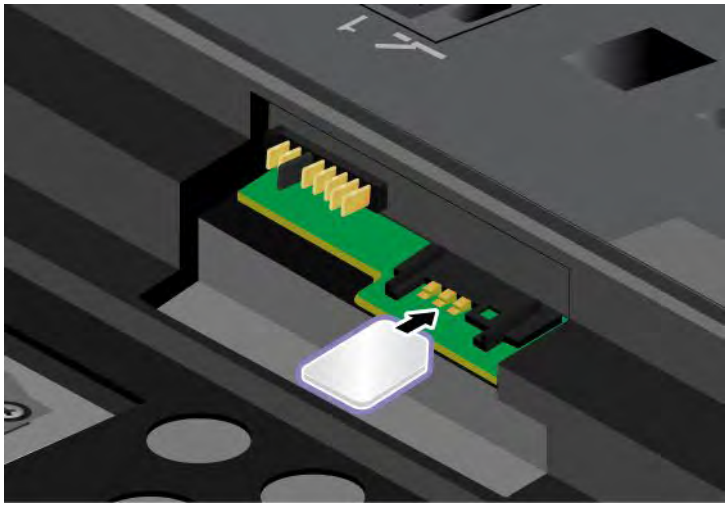

Note: Make sure that you insert the SIM card all the way into the slot.

6. Put the battery back in place. For more details, refer to “Replacing the battery” on page 116.
7. Turn the computer over again, and reconnect the cables.

Chapter 7. Enhancing your computer

This section provides information on installing devices and taking advantage of your computer's high-technology features.

- “Finding ThinkPad options” on page 149
- “ThinkPad X220 UltraBase” on page 149
- “ThinkPad Port Replicator Series 3, ThinkPad Mini Dock Series 3, and ThinkPad Mini Dock Plus Series 3” on page 159

Finding ThinkPad options

If you want to expand the capabilities of your computer, Lenovo has a number of hardware accessories and upgrades to meet your needs. Options include memory, storage, modems, networking adapters, docking stations and port replicators, batteries, power adapters, printers, scanners, keyboards, mice, and more.

You can shop at Lenovo 24 hours a day, 7 days a week directly over the World Wide Web. All you need is an Internet connection and a credit card.

To shop at Lenovo, go to:
http://www.lenovo.com/accessories/services/index.html

ThinkPad X220 UltraBase

Your ThinkPad X220, X220i, X220 Tablet, and X220i Tablet support the ThinkPad X220 UltraBase.

After you attach your computer to the ThinkPad X220 UltraBase, you can use its connectors in place of the computer's.

When the computer is attached to the ThinkPad X220 UltraBase, never pick up the assembly by taking hold of the computer alone. Always hold the whole assembly.

For more details about the ThinkPad X220 UltraBase, refer to the following:

- ThinkPad X220 Ultrabase top view
- ThinkPad X220 Ultrabase bottom view
- “Attaching a ThinkPad X220 Ultrabase” on page 151
- “Detaching a ThinkPad X220 Ultrabase” on page 153
- Security feature

© Copyright Lenovo 2011

ThinkPad X220 Ultrabase top view

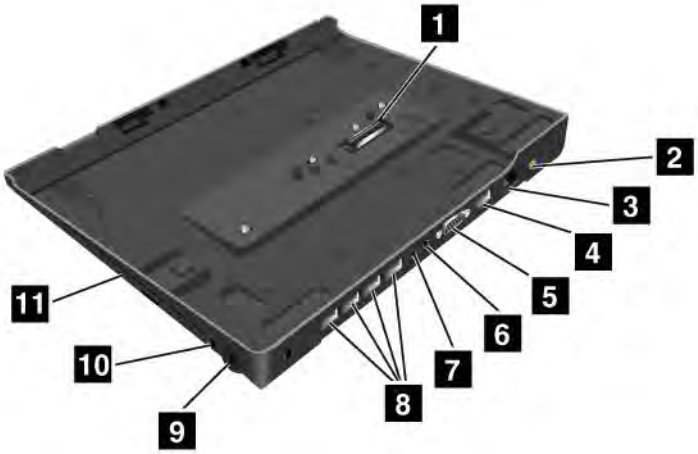

1 The **docking connector** is used for attaching the ThinkPad computer to the ThinkPad X220 UltraBase.

2 The **power jack** is where you connect the AC adapter.

3 The **Ethernet connector** is for connecting the ThinkPad X220 UltraBase to a LAN.

4 The **DisplayPort connector** is for connecting a DisplayPort-compatible display device.

5 The **Monitor connector** is for attaching an external monitor or a projector to your computer.

6 The **headphone jack**, a jack 1/8 inch (3.5 mm) in diameter, is for connecting an external headphone.

7 The **microphone jack**, a jack 1/8 inch (3.5 mm) in diameter, is for connecting an external microphone.

8 The **Universal Serial Bus (USB) connector** is for connecting the devices that conform to the USB interface.

9 The **security keyhole** is for locking the dock.

10 The **system lock key** is for locking the eject button.

11 The **bay** is for optical disk drive or second hard disk drive.

ThinkPad X220 Ultrabase bottom view

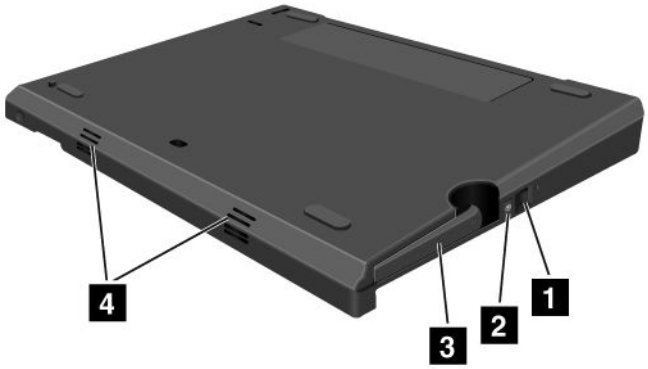

1 By pressing the **eject request button**, you can tell the operating system to get ready for undocking.

2 The **docking indicator** is red when your computer is docked. It blinks when the eject request button is pressed.

3 The **eject lever** detaches your computer from the ThinkPad X220 UltraBase.

4 The **holes** are for the system speakers.

Attaching a ThinkPad X220 Ultrabase

Attention: Disconnect the AC power from your computer before you attach the ThinkPad X220 UltraBase. The AC adapter connector will be damaged if it remains connected to the computer during the attachment

You can hot attach or warm attach the computer to the ThinkPad X220 UltraBase. Hot attach is attaching the computer to the ThinkPad X220 UltraBase while in operating mode; warm attach is attaching the computer to the ThinkPad X220 UltraBase while in sleep (standby) mode.

In doing a hot- or warm- attach, observe the following:

- For hot-attaching: The docking indicator of the ThinkPad X220 UltraBase should turn on after a few seconds.
- For warm-attaching: When the computer returns from sleep (standby) mode, the docking indicator of the ThinkPad X220 UltraBase should turn on.

To attach your computer to a ThinkPad X220 Ultrabase, do the following:

1. Make sure that the system lock key of the ThinkPad X220 UltraBase is in the unlocked (vertical) position.

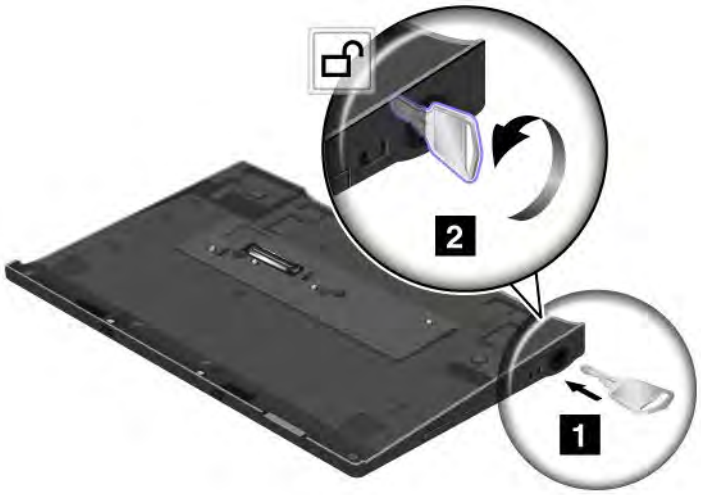

2. Align the front of the computer with the front of the ThinkPad X220 UltraBase.

3. Make sure that the guides of the ThinkPad X220 UltraBase align with the holes of the computer 1. Then put the computer in place 2. The docking indicator lights.

4. When the computer is already docked to the ThinkPad X220 UltraBase, you can start the computer.

Note: You can turn the key clockwise to lock it. Then, keep the security key in a safe place. Do not lose this key; otherwise, you will be unable to detach the computer from the ThinkPad X220 UltraBase.

Detaching a ThinkPad X220 Ultrabase

Attention: Do not detach your computer from the ThinkPad X220 UltraBase while the docking indicator of the ThinkPad X220 UltraBase is blinking or on. Wait until the docking indicator turns off. Detaching while the indicator is blinking or on causes the system to beep, and the computer may halt.

You can hot detach or warm detach the computer from the ThinkPad X220 UltraBase. Hot detach is detaching the computer from the ThinkPad X220 UltraBase while in operating mode; warm detach is detaching the computer from the ThinkPad X220 UltraBase while in sleep (standby) mode.

To perform a hot-detach, follow the steps below:

For Windows 7 and Windows Vista:

1. Click **Start**, and then press the right arrow button.
2. Select **Undock**.
3. Make sure that the docking indicator of the ThinkPad X220 UltraBase is off.

For Windows XP:

1. Select the **Undock Computer** in the **Start** menu.
2. Make sure that the docking indicator of the ThinkPad X220 UltraBase is off.

Note: Detaching the UltraBase suddenly while the computer is operating without performing the procedure above may cause the system to malfunction or hang.

To perform a warm-detach, press the **eject request button** of the ThinkPad X220 UltraBase. The system will then resume with an **OK** message. Make sure that the docking indicator of the ThinkPad X220 UltraBase is off. The computer will re-enter sleep (standby) mode.

If you are hot-or warm-detaching the computer, make sure that

- the devices connected to USB, Serial, and Parallel connectors are not in use.
- the connection to a Modem or Ethernet port has ended.
- the battery is fully charged.

To detach your computer from the ThinkPad X220 Ultrabase, do the following:

1. Make sure that the system lock key of the ThinkPad X220 UltraBase is in the unlocked (vertical) position.

2. Close the computer display.
3. If you are hot/warm-detaching the computer, press the eject request button of the ThinkPad X220 UltraBase. Then make sure that the eject inhibit indicator of the ThinkPad X220 UltraBase is off, and the eject ready indicator lights up.
4. Release the eject lever on the left side of the ThinkPad X220 UltraBase **1** until the computer lifts up; then remove the computer **2**.

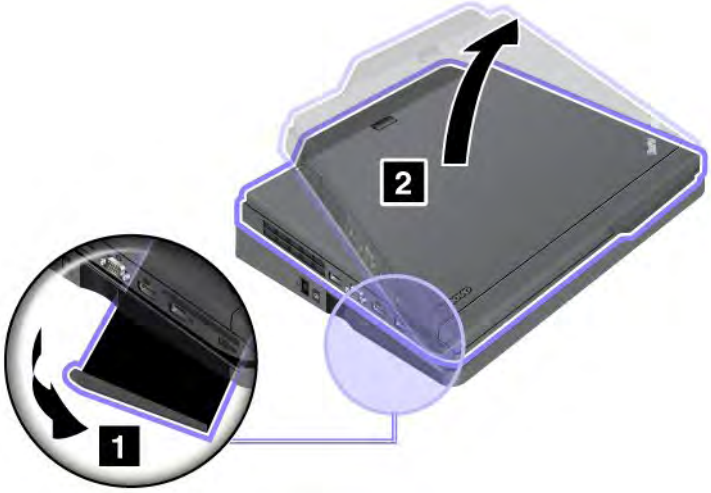

Security feature

The lock of the ThinkPad X220 UltraBase has two positions.

1 Unlock position:

If the UltraBase lock is in this position, your computer is not secured.

1 Base lock position:

If the UltraBase lock is in this position, the ThinkPad X220 UltraBase is locked, and the computer cannot be removed from the ThinkPad X220 UltraBase. The Serial Ultrabay Slim device is also locked and cannot be removed from the UltraBase.

Note: Keep the security key in a safe place. Do not lose this key; otherwise, you will be unable to detach the computer from the ThinkPad X220 UltraBase

If you attach a mechanical lock to the security keyhole of the ThinkPad X220 UltraBase, the ThinkPad X220 UltraBase cannot be taken out of the locked position, and you can secure your computer and the ThinkPad X220 UltraBase.

Note: You need to purchase the mechanical lock commercially. You are responsible for evaluating, selecting, and implementing the locking devices and security features.

ThinkPad Battery 19+

Your ThinkPad X220, X220i, X220 Tablet, and X220i Tablet support the ThinkPad Battery 19+.

With ThinkPad Battery 19+, you can extend the operating time of your notebook computer.

When the computer is attached to the ThinkPad Battery 19+, never pick up the assembly by taking hold of the computer alone. Always hold the whole assembly.

Top view

1 The **docking connector** is used for attaching the ThinkPad computer to the ThinkPad Battery 19+.

Bottom view

1 The **power jack** is where you connect the AC adapter.

2 By pressing the **indicator button**, the **status indicator** shows the ThinkPad Battery 19+ charge status.

3 The **status indicator** is to show the ThinkPad Battery 19+ charge status.

4 The **eject lever** is to release the ThinkPad Battery 19+ from the docking connector in the computer.

5 The **battery latch** prevents the **eject lever** from being released.

Attaching a ThinkPad Battery 19+

Attention: Disconnect the AC power from your computer before you attach the ThinkPad Battery 19+. The AC adapter connector will be damaged if it remains connected to the computer during the attachment.

To attach a ThinkPad Battery 19+, do the following:

1. Align the front of the computer with the front of the ThinkPad Battery 19+.

2. Make sure that the guides of the ThinkPad Battery 19+ align with the holes of the computer **1**. Then put the computer in place **2**.

Detaching a ThinkPad Battery 19+

To detach a ThinkPad Battery 19+, do the following:

1. Unlock the battery latch by sliding it to the unlock position.

2. Release the eject lever **2** and pull up the ThinkPad Battery 19+.

Charging a ThinkPad Battery 19+

The ThinkPad Battery 19+ can be charged separately.

The ThinkPad Battery 19+ can also be charged with a computer.

When the ThinkPad Battery 19+ is charged with a computer, both the main battery and ThinkPad Battery 19+ can be charged simultaneously.

ThinkPad Port Replicator Series 3, ThinkPad Mini Dock Series 3, and ThinkPad Mini Dock Plus Series 3

Note: Only ThinkPad X220 and X220i support ThinkPad Port Replicator Series 3, ThinkPad Mini Dock Series 3, and ThinkPad Mini Dock Plus Series 3.

After you attach your computer to the ThinkPad Port Replicator Series 3, the ThinkPad Mini Dock Series 3, or the ThinkPad Mini Dock Plus Series 3, you can use its connectors in place of the computer's.

When the computer is attached to the ThinkPad Port Replicator Series 3, the ThinkPad Mini Dock Series 3, or the ThinkPad Mini Dock Plus Series 3, never pick up the assembly by taking hold of the computer alone. Always hold the whole assembly.

For more details about the ThinkPad Port Replicator Series 3, the ThinkPad Mini Dock Series 3, or the ThinkPad Mini Dock Plus Series 3, refer to the following:

- “Front view” on page 160
- “Rear view” on page 163
- “Attaching a ThinkPad Port Replicator Series 3, ThinkPad Mini Dock Series 3, or ThinkPad Mini Dock Plus Series 3” on page 166
- “Detaching a ThinkPad Port Replicator Series 3, ThinkPad Mini Dock Series 3, and ThinkPad Mini Dock Plus Series 3” on page 168
- “Security feature” on page 170
- “Using the system lock key” on page 172

Front view

ThinkPad Port Replicator Series 3

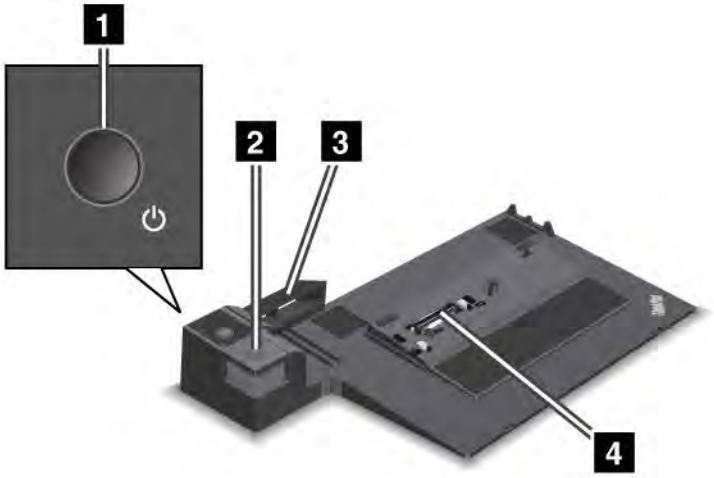

1 The **power switch** turns the computer on and off.

2 The **eject button** releases the computer from the ThinkPad Port Replicator Series 3 when pressed.

3 The **sliding adjuster** is a guide used to align the docking connector on your computer as you attach the ThinkPad Port Replicator Series 3.

4 The **docking connector** is where you attach your computer.

ThinkPad Mini Dock Series 3

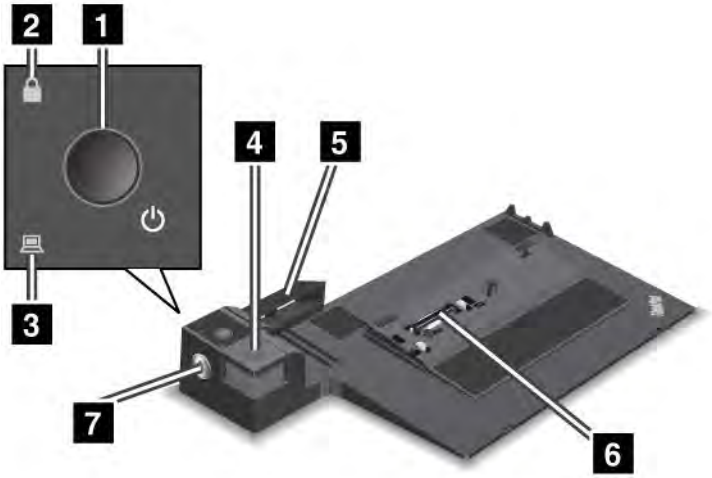

1 The **power switch** turns the computer on and off.

2 The **key lock indicator** lights when the system lock key is in the locked position. When the system lock key is in the locked position, the eject button of the ThinkPad Mini Dock Series 3 is locked; you cannot attach or remove your computer.

3 The **docking indicator** lights when your computer is docked.

4 The **eject button** releases the computer from the ThinkPad Mini Dock Series 3 when pressed.

5 The **sliding adjuster** is a guide used to align the docking connector on your computer as you attach the ThinkPad Mini Dock Series 3.

6 The **docking connector** is where you attach your computer.

7 The **system lock key** is for locking the eject button.

ThinkPad Mini Dock Plus Series 3

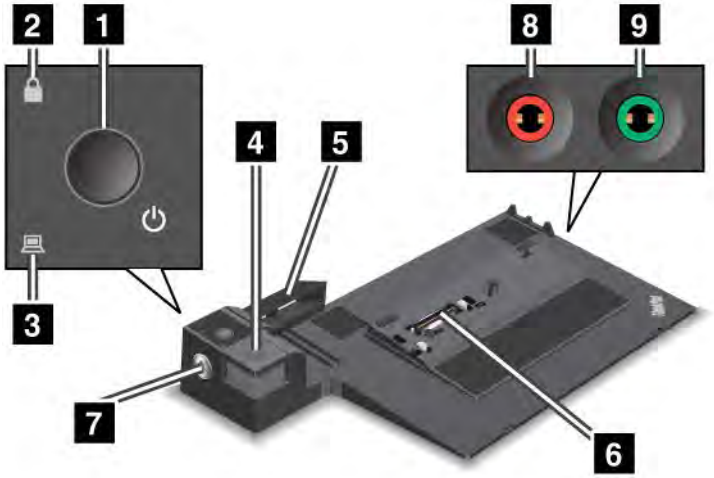

1 The **power switch** turns the computer on and off.

2 The **key lock indicator** lights when the system lock key is in the locked position. When the system lock key is in the locked position, the eject button of the ThinkPad Mini Dock Plus Series 3 is locked; you cannot attach or remove your computer.

3 The **docking indicator** lights when your computer is docked.

4 The **eject button** releases the computer from the ThinkPad Mini Dock Plus Series 3 when pressed.

5 The **sliding adjuster** is a guide used to align the docking connector on your computer as you attach the ThinkPad Mini Dock Plus Series 3.

6 The **docking connector** is where you attach your computer.

7 The **system lock key** is for locking the eject button.

8 The **microphone jack**, a jack 1/8 inch (3.5 mm) in diameter, is for connecting an external microphone.

9 The **headphone jack**, a jack 1/8 inch (3.5 mm) in diameter, is for connecting an external stereo headphone.

Rear view

ThinkPad Port Replicator Series 3

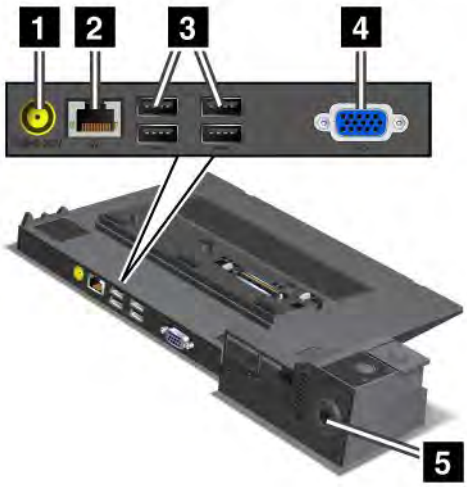

1 The **power jack** is for connecting the ac power adapter.

2 The **Ethernet connector** is for connecting the ThinkPad Port Replicator Series 3 to an Ethernet LAN. The indicator on the connector is the same as that on the computer.

Notes:

- You cannot use the Token Ring cable for this connector.
- You can use this connector for a 10BASE-T/100BASE-TX/1000BASE-T Ethernet.

If you attach your computer to the ThinkPad Port Replicator Series 3 and use an Ethernet connector, use the Ethernet connector on the ThinkPad Port Replicator Series 3, not the one on the computer.

3 The **Universal Serial Bus connectors** are for connecting USB 1.1 and USB 2.0 devices.

4 The **external monitor connector** is for connecting an external monitor.

Note: If you attach your computer to the ThinkPad Port Replicator Series 3 and use an external monitor connector, use the external monitor connector on the ThinkPad Port Replicator Series 3, not the one on the computer.

5 When you attach a mechanical lock to the **security keyhole**, the eject button is locked so that the computer cannot be removed from the ThinkPad Port Replicator Series 3.

ThinkPad Mini Dock Series 3

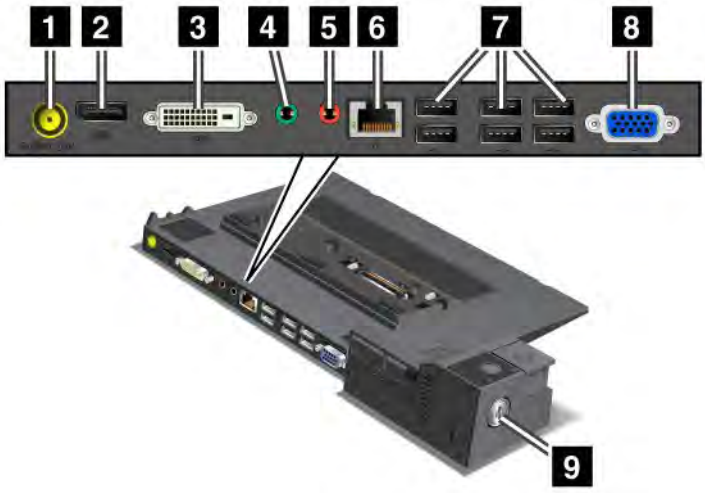

1 The **power jack** is for connecting the ac power adapter.

2 The **DisplayPort** is for connecting a display device.

3 The **digital visual interface connector** is for connecting a monitor that supports Single-Link DVI.

Note: The DVI connector provides a digital interface only. This connector can be used with a computer that supports DVI via docking only.

4 The **headphone jack**, a jack 1/8 inch (3.5 mm) in diameter, is for connecting an external stereo headphone.

5 The **microphone jack**, a jack 1/8 inch (3.5 mm) in diameter, is for connecting an external microphone.

6 The **Ethernet connector** is for connecting the ThinkPad Mini Dock Series 3 to an Ethernet LAN. The indicator on the connector is the same as that on the computer.

Notes:

- You cannot use the Token Ring cable for this connector.
- You can use this connector for a 10BASE-T/100BASE-TX/1000BASE-T Ethernet.

If you attach your computer to the ThinkPad Mini Dock Series 3 and use an Ethernet connector, use the Ethernet connector on the ThinkPad Mini Dock Series 3, not the one on the computer.

7 The **Universal Serial Bus connectors** are for connecting USB 1.1 and USB 2.0 devices.

8 The **external monitor connector** is for connecting an external monitor.

Note: If you attach your computer to the ThinkPad Mini Dock Series 3 and use an external monitor connector, use the external monitor connector on the ThinkPad Mini Dock Series 3, not the one on the computer.

9 When you attach a mechanical lock to the **security keyhole**, the eject button is locked so that the computer cannot be removed from the ThinkPad Mini Dock Series 3.

ThinkPad Mini Dock Plus Series 3

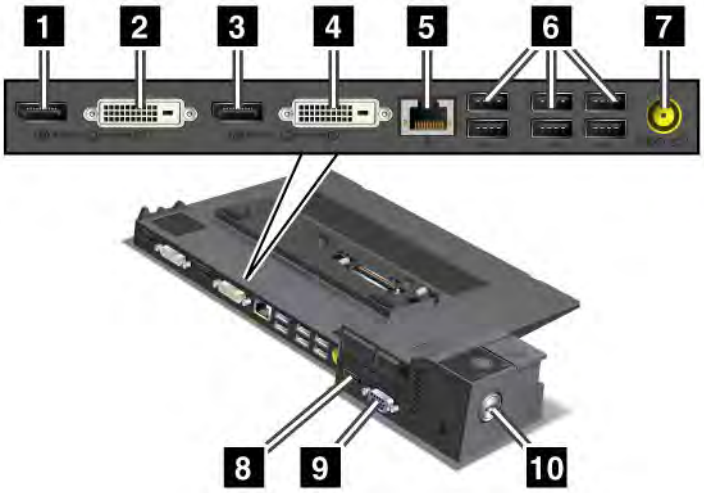

1 The **DisplayPort** is for connecting a display device.

2 The **digital visual interface connector** is for connecting a monitor that supports Single-Link DVI.

Note: The DVI connector provides a digital interface only. This connector can be used with a computer that supports DVI via docking only.

3 The **DisplayPort** is for connecting a display device.

4 The **digital visual interface connector** is for connecting a monitor that supports Single-Link DVI.

Note: The DVI connector provides a digital interface only. This connector can be used with a computer that supports DVI via docking only.

5 The **Ethernet connector** is for connecting the ThinkPad Mini Dock Plus Series 3 to an Ethernet LAN. The indicator on the connector is the same as that on the computer.

Notes:

- You cannot use the Token Ring cable for this connector.
- You can use this connector for a 10BASE-T/100BASE-TX/1000BASE-T Ethernet.

If you attach your computer to the ThinkPad Mini Dock Plus Series 3 and use an Ethernet connector, use the Ethernet connector on the ThinkPad Mini Dock Plus Series 3, not the one on the computer.

6 The **Universal Serial Bus connectors** are for connecting USB 1.1 and USB 2.0 devices.

7 The **power jack** is for connecting the ac power adapter.

8 The **eSATA** is for connecting an eSATA device.

9 The **external monitor connector** is for connecting an external monitor.

Note: If you attach your computer to the ThinkPad Mini Dock Plus Series 3 and use an external monitor connector, use the external monitor connector on the ThinkPad Mini Dock Plus Series 3, not the one on the computer.

10 When you attach a mechanical lock to the **security keyhole**, the eject button is locked so that the computer cannot be removed from the ThinkPad Mini Dock Plus Series 3.

Attaching a ThinkPad Port Replicator Series 3, ThinkPad Mini Dock Series 3, or ThinkPad Mini Dock Plus Series 3

To attach your computer to a ThinkPad Port Replicator Series 3, a ThinkPad Mini Dock Series 3, or a ThinkPad Mini Dock Plus Series 3, do the following:

The following drawings are for the ThinkPad Mini Dock Series 3 or the ThinkPad Mini Dock Plus Series 3. The procedure is the same for the ThinkPad Port Replicator Series 3.

Notes:

- Before you attach the computer to a ThinkPad Port Replicator Series 3, a ThinkPad Mini Dock Series 3, or a ThinkPad Mini Dock Plus Series 3, disconnect an ac power adapter from the computer.
- If your computer is operating, make sure that it has finished any operations involving devices that are connected to a USB connector and a USB/eSATA connector. Also make sure that any connection to an Ethernet port has ended.
- Before you attach your computer to a ThinkPad Mini Dock Series 3, or a ThinkPad Mini Dock Plus Series 3), make sure that the system lock key is in place and in the unlocked (horizontal) position.

1. To attach your computer, make sure that the system lock key is in place and in the unlocked (horizontal) position for the ThinkPad Mini Dock Series 3, or the ThinkPad Mini Dock Plus Series 3. Make sure that the mechanical lock is detached for the ThinkPad Port Replicator Series 3.

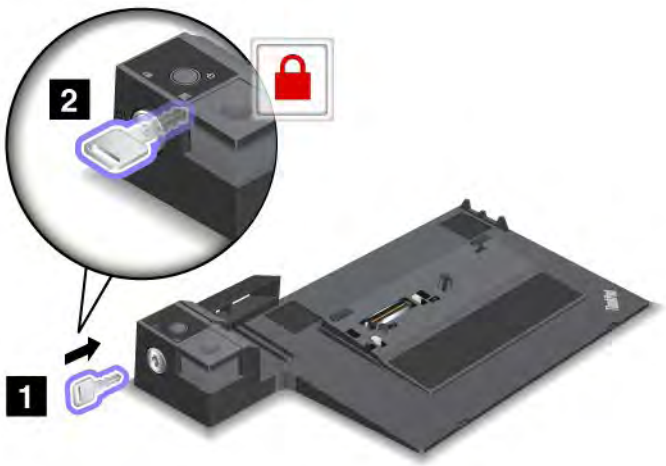

2. Press the button of the ThinkPad Mini Dock Series 3, or the ThinkPad Mini Dock Plus Series 3 **1**. Pull the sliding adjuster in the direction shown by the arrow **2**.

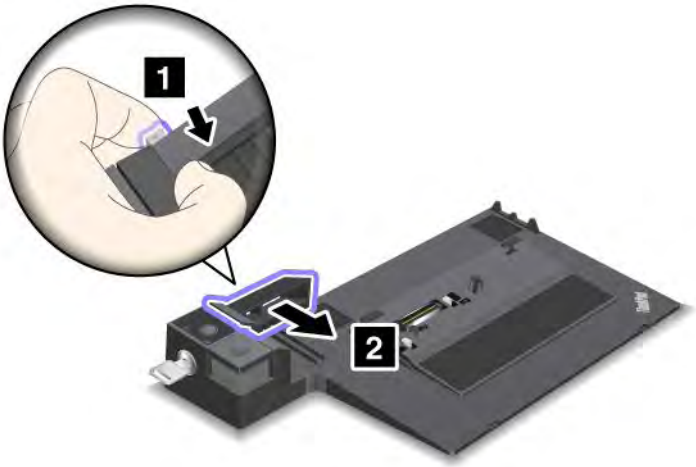

3. Put your computer on the platform of the ThinkPad Mini Dock Series 3, or the ThinkPad Mini Dock Plus Series 3, making sure that the top-left corner of the computer is aligned to the guide plate on the ThinkPad Mini Dock Series 3, or the ThinkPad Mini Dock Plus Series 3.

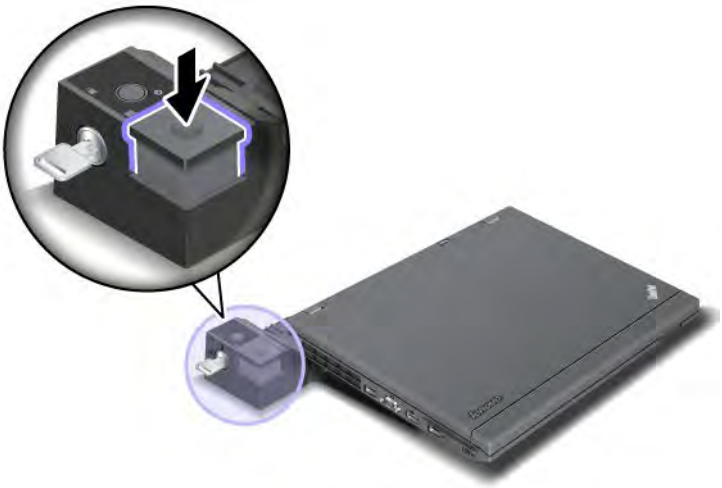

4. Insert your computer into the ThinkPad Mini Dock Series 3, or the ThinkPad Mini Dock Plus Series 3, along the surface, until you hear a click. The computer is now attached to the ThinkPad Mini Dock Series 3, or the ThinkPad Mini Dock Plus Series 3).

   Note: If the docking indicator is not lighted after you attach the ThinkPad Mini Dock Series 3, or the ThinkPad Mini Dock Plus Series 3, your computer is not properly connected to the dock. Check the ac power adapter of the dock, or disconnect and re-attach the ac power adapter. Then attach your computer to the dock.

Notes:

- If you attach the ThinkPad Port Replicator Series 3, the ThinkPad Mini Dock Series 3, or the ThinkPad Mini Dock Plus Series 3 to your computer, but do not connect the ac power adapter of that attachment to the power jack, your computer goes into battery mode.

- If your computer and the ThinkPad Port Replicator Series 3, the ThinkPad Mini Dock Series 3, or the ThinkPad Mini Dock Plus Series 3 are connected to separate ac power adapters, your computer goes into battery mode first, and then shifts into ac mode.
- If in either of the two preceding situations the battery of your computer is detached, or has no battery charge, your computer shuts down.

Connecting an external display to the ThinkPad Mini Dock Plus Series 3

Group 1 (top figure) and Group 2 (lower figure) are independent of each other. Each has a DisplayPort and a digital visual interface. If you connect a display to a DisplayPort and a DVI that are in the same group, the DisplayPort is inactive.

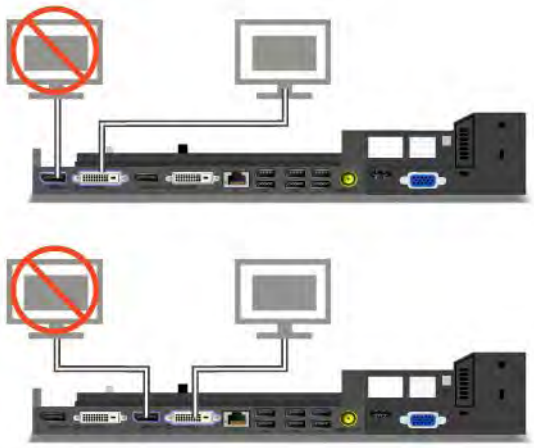

Detaching a ThinkPad Port Replicator Series 3, ThinkPad Mini Dock Series 3, and ThinkPad Mini Dock Plus Series 3

To detach your computer from the ThinkPad Mini Dock Series 3, and the ThinkPad Mini Dock Plus Series 3, do the following:

1. Make sure that:
   - The devices connected to USB connectors are not in use.
   - The connection to an Ethernet port has been ended.
   - The devices connected to an eSATA port are not in use (ThinkPad Mini Dock Plus Series 3).

2. Make sure that the system lock key of the ThinkPad Mini Dock Series 3, or the ThinkPad Mini Dock Plus Series 3 is in place and in the unlocked (horizontal) position.

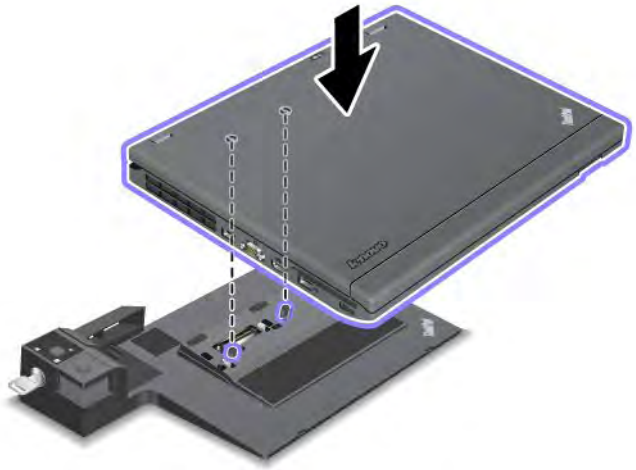

3. Press the eject button **1** until the computer moves up; then, grasp both sides, and remove the computer **2**.

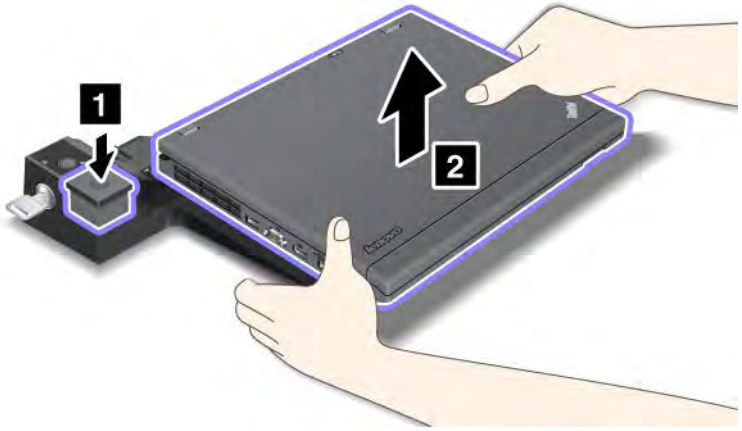

To detach your computer from the ThinkPad Port Replicator Series 3, do the following:

Notes:

- If your computer is operating, make sure that it has finished operations involving devices that are connected to the USB connector. Also make sure that any Ethernet connection is stopped.
- Make sure that the battery pack is fully charged.

1. Make sure that all ejectable devices connected to the ThinkPad Port Replicator Series 3 are stopped.

2. Press the eject button **1** until the computer moves up; then, grasp both sides, and remove the computer **2**.

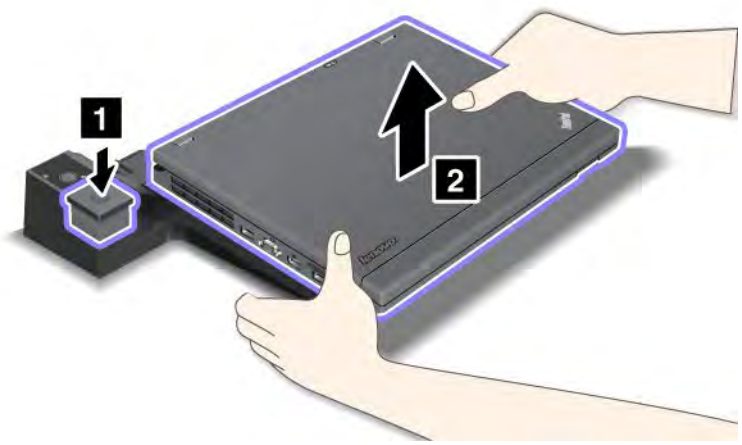

Security feature

The ThinkPad Port Replicator Series 3, the ThinkPad Mini Dock Series 3, or the ThinkPad Mini Dock Plus Series 3 has a security keyhole for a mechanical lock. By attaching a mechanical lock with cable there, you can secure the ThinkPad Port Replicator Series 3, the ThinkPad Mini Dock Series 3, or the ThinkPad Mini Dock Plus Series 3 to a heavy object, such as a desk.

If you use the ThinkPad Port Replicator Series 3, and attach a mechanical lock, the eject button is also locked, so that the computer cannot be detached from the ThinkPad Port Replicator Series 3.

If you use the ThinkPad Mini Dock Series 3 or the ThinkPad Mini Dock Plus Series 3, and attach a mechanical lock, the eject button is not locked. To lock the eject button, use the system lock key.

Lenovo does not offer a mechanical lock. You will need to purchase one elsewhere. You are responsible for evaluating, selecting, and implementing any locking device and security feature. Lenovo makes no comments, judgments, or warranties about the function, quality, or performance of any locking device or security features.

Attach a mechanical lock to the ThinkPad Mini Dock Plus Series 3 as follows:

Attach a mechanical lock to the ThinkPad Mini Dock Series 3 as follows:

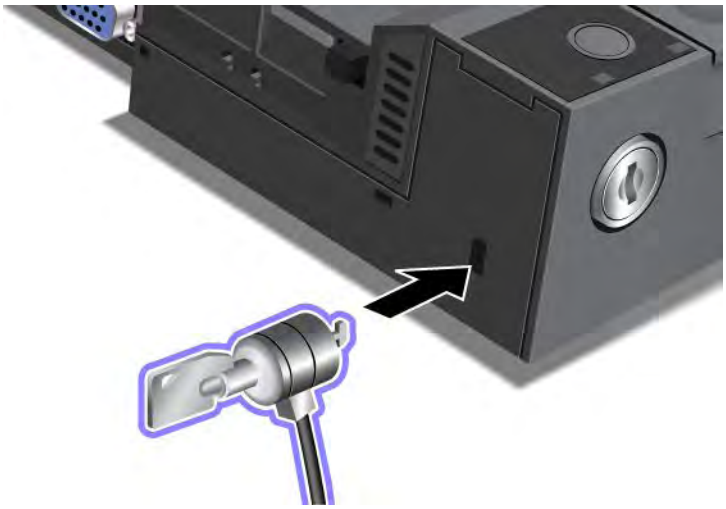

Attach a mechanical lock to the ThinkPad Port Replicator Series 3 as follows:

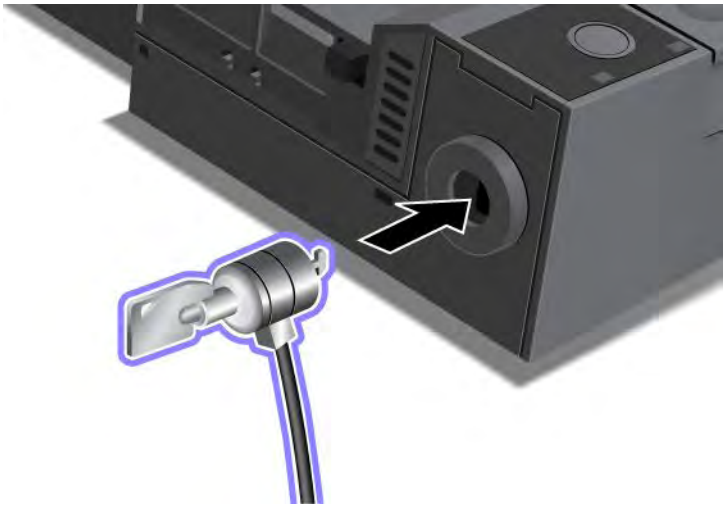

Using the system lock key

The system lock key has two positions, unlocked and locked.

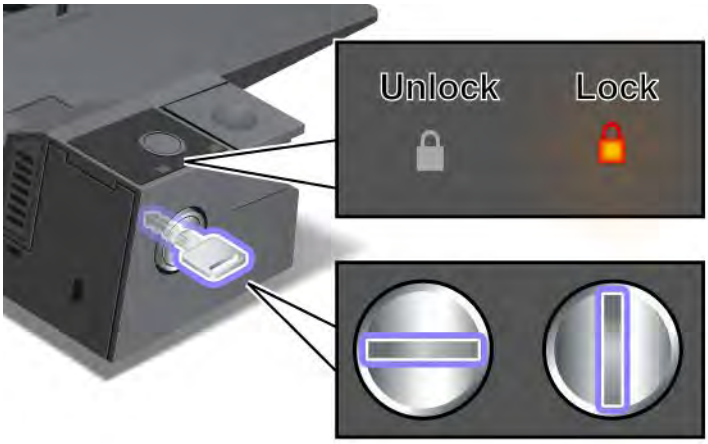

When the key is in the locked position, the eject button of the ThinkPad Mini Dock Series 3 or the ThinkPad Mini Dock Plus Series 3 is locked, and you cannot remove your computer. The key lock indicator lights when the eject button is locked.

Chapter 8. Advanced configuration

While it is important to protect files, data, and settings that are on the hard disk or on the solid state drive, you may also need to install a new operating system, install new device drivers, update your UEFI BIOS, or recover preinstalled software. This information will help you handle your computer with proper care and keep it in top working shape.

- "Installing a new operating system" on page 173
- "Installing device drivers" on page 178
- "ThinkPad Setup" on page 181
- "Using system management" on page 197

Installing a new operating system

If you install a new operating system in your computer, you need to install the Supplement files and ThinkPad device drivers for it at the same time. The necessary files are located in the following directories of your solid state drive or hard disk drive:

- The Supplement files for the operating system supported are in the `C:\SWTOOLS\OSFIXES` directory.
- The device drivers for the operating system supported are in the `C:\SWTOOLS\DRIVERS` directory.
- The preloaded software applications are in the `C:\SWTOOLS\APPS` directory.

Notes:

- The process of installing the new operating system deletes all the data on your hard disk, including backups or images that were stored in a hidden folder by use of the Rescue and Recovery program.
- If you cannot find the Supplement files, the device drivers, and application software you need on your hard disk drive, or if you want to receive updates and the latest information about them, go to: http://www.lenovo.com/support/site.wss/document.do?sitestyle=lenovo&lndocid=tpad-matrix

Before you begin

Before you install the operating system, do the following:

- Copy all the subdirectories and files in the `C:\SWTOOLS` directory to a removable storage device, to avoid losing files during the installation.
- Print the sections you will be using. Go to the section for the operating system you are using:
  - "Windows 7" on page 174
  - "Windows Vista" on page 175
  - "Windows XP" on page 176

  Notes: If your computer is a Windows Vista SP2 or Windows 7 model,

  - 32-bit versions of Windows do not support UEFI BIOS features. Only 64-bit versions of Windows can take advantage of the features enabled by 64-bit UEFI BIOS.
  - If you want to start Windows Recovery Environment (WinRE) using 64-bit version of Microsoft Windows Installation DVD, you should not change the initial **UEFI/Legacy Boot** setting in ThinkPad Setup. The **UEFI/Legacy Boot** setting must be the same as it was when the Windows OS image was installed. Or, you will see an error.

For the country or region code required in the installation, use one of the following:

© Copyright Lenovo 2011

Country or region: Code
China: SC
Denmark: DK
Finland: FI
France: FR
Germany: GR
Italy: IT
Japan: JP
Netherlands: NL
Netherlands: NL
Norway: NO
Spain: SP
Sweden: SV
Taiwan and Hong Kong: TC
United States: US

Installing Windows 7

Before you start, print these instructions.

To install Windows 7 and its related software on your computer, do as follows:

1. Start the ThinkPad Setup.
2. Select **Startup** menu.
3. Select **UEFI/Legacy Boot**.
4. Do one of the following:
   - If you want to install the Windows 7 32–bit operating system, select **Legacy Only** or **Both**.
   - If you want to install the Windows 7 64–bit operating system in Legacy mode, select **Legacy Only**.
   - If you want to install the Windows 7 64–bit operating system in UEFI mode, select **UEFI Only**.
5. Press F10.
6. To install Windows 7, insert the DVD for Windows 7 into the DVD drive, and install Windows 7 from the DVD. Then restart the computer, and follow the instructions on the screen.
7. Install the Intel Chipset Support for Windows 2000/XP/Vista/7. To do this, refer to “Installing Intel Chipset Support for Windows 2000/XP/Vista/7” on page 180.
8. Install device drivers. To do this, refer to “Installing drivers and software” on page 181.

Installing Registry Patches for Windows 7

Install the following Registry Patches:

- Registry patch enabling Wake Up on LAN from Standby for Energy Star
- Fix for Issue of HDD with HD Detection

To install these Registry Patches, go to:
http://www.lenovo.com/support

Installing the Windows 7 Update Module Package

The Windows 7 Update Modules are in the following directory:
`C:\SWTOOLS\OSFIXES\`.

The name of each subfolder is the number of a fix module. For information about each fix module, go to the Microsoft Knowledge Base homepage at http://support.microsoft.com/, type the number of the fix module you need in the search field, and click **Search**.

Note: The Web site address might change without notice. If the homepage is not displayed, search for it from the Microsoft top page.

To install a fix module, run the EXE file in a subfolder and follow the instructions on the screen.

Note: If you remove the hard disk drive from the computer with a single-core processor and install it on a computer with a dual-core processor, you can get access to the hard disk drive. The opposite, however, is not true: If you remove the hard disk drive from a computer with a dual-core processor and install it on a computer with a single-core processor, you cannot get access to the hard disk drive.

Installing Windows Vista

Before you start, print these instructions.

Note: Your computer supports Windows Vista with the Service Pack 2. Before you install Windows Vista Service Pack 2, make sure you install the Windows Vista Service Pack 1 first.

To install Windows Vista and its related software on your computer, do as follows:

1. Start the ThinkPad Setup.
2. Select **Startup** menu.
3. Select **UEFI/Legacy Boot**.
4. Do one of the following:
   - If you want to install the Windows Vista 32–bit operating system, select **Legacy Only** or **Both**.
   - If you want to install the Windows Vista 64–bit operating system in Legacy mode, select **Legacy Only**.
   - If you want to install the Windows Vista 64–bit operating system in UEFI mode, select **UEFI Only**.
5. Press F10.
6. Insert the DVD for Windows Vista integrated with Service Pack 1 into the DVD drive, and restart the computer.
7. Complete the installation of Windows Vista Service Pack 1 by following OS installing instructions.
8. Install the Windows Vista Service Pack 2. You can install the Windows Vista Service Pack 2 using the *Windows Vista Service Pack 2 Installation* CD or download it from either Microsoft Download Center or Microsoft Windows update Web site.
9. Install the Intel Chipset Support for Windows 2000/XP/Vista/7. To do this, refer to “Installing Intel Chipset Support for Windows 2000/XP/Vista/7” on page 180.
10. Install device drivers. To do this, refer to “Installing drivers and software” on page 181.

Installing Registry Patches for Windows Vista

Install the following Registry Patches:

- Registry Patch enabling Device Initiated Power Management on SATA
- Registry Patch enabling USB S3 Power Management
- Registry patch to change IDLE IRP timing by Fingerprint reader
- Registry patch enabling Wake Up on LAN from Standby for Energy Star
- Registry patch to improve USB device detection on resume from sleep
- Fix for Issue of HDD with HD Detection

To install these Registry Patches, go to :
http://www.lenovo.com/support

Installing the Windows Vista Update Module Package

The Windows Vista Update Modules are in the following directory: `C:\SWTOOLS\OSFIXES\`.

The name of each subfolder is the number of a fix module. For information about each fix module, go to the Microsoft Knowledge Base homepage at http://support.microsoft.com/, type the number of the fix module you need in the search field, and click **Search**.

Note: The Web site address might change without notice. If the homepage is not displayed, search for it from the Microsoft top page.

To install a fix module, run the .exe file in a subfolder and follow the instructions on the screen.

Note: If you remove the hard disk drive from the computer with a single-core processor and install it on a computer with a dual-core processor, you can get access to the hard disk drive. The opposite, however, is not true: If you remove the hard disk drive from a computer with a dual-core processor and install it on a computer with a single-core processor, you cannot get access to the hard disk drive.

Installing Windows XP

Before you start, print these instructions.

Note: Only ThinkPad X220 and ThinkPad X220i support Windows XP.

Note: Your computer supports Windows XP with Service Pack 3. Before you install the Windows XP Service Pack 3, make sure you install the Windows XP Service Pack 2 first.

You must install Intel Rapid Storage Technology Driver before installing the operating system. To install it, you may need to attach a diskette drive to your computer. If you have a diskette drive, follow the procedure below.

Before installing the operating system, install Intel Rapid Storage Technology Driver as follows:

Note: Be sure to install Intel Rapid Storage Technology Driver before installing the operating system. Otherwise your computer will not respond; it will only display a blue screen.

1. Attach a diskette drive to your computer.
2. Copy Intel Rapid Storage Technology Driver from `C:\SWTOOLS\DRIVERS\IMSM` to a diskette.
3. To make sure that SATA AHCI is enabled, start the ThinkPad Setup.
4. Select **Config**.
5. Select **Serial ATA (SATA)**.
6. Select **AHCI** .
7. Change the startup sequence of your computer. Select **Startup** menu.
8. Select **UEFI/Legacy Boot**.
9. Select **Both** or **Legacy Only**.
10. Press F10.
11. Insert the CD for Windows XP integrated with Service Pack 2 into the CD or DVD drive, and restart the computer.
12. To install a third-party SCSI driver first, press F6.
13. When prompted, select **S** for Specify Additional Device.
14. When prompted, insert the diskette that you created in step 2, and press Enter.
15. Scroll the list of drivers. If the **SATA** setting of you computer is set to **AHCI**, select Intel® **Mobile Express Chipset SATA AHCI Controller**.

16. To continue the installation, press Enter again. Leave the diskette in the drive until the next reboot; the software may need to be copied from the diskette again when the files are copied during setup.
17. Complete the installation of Windows XP Service Pack 2 by following OS installing instructions.
18. Install Windows XP Service Pack 3. You can install the Windows XP Service Pack 3 using the *Windows XP Service Pack 3 Installation CD* or download it from either Microsoft Download Center or Microsoft Windows update Web site.
19. Install the Intel Chipset Support for Windows 2000/XP/Vista/7. To do this, refer to "Installing Intel Chipset Support for Windows 2000/XP/Vista/7" on page 180.
20. Apply the PCMCIA Power Policy Registry Patch. To do this, go to `C:\SWTOOLS\OSFIXES\PCMCIAPW\`, double-click install.bat. Then follow the instructions that appear on the screen.
21. Install device drivers. To do this, refer to "Installing drivers and software" on page 181.

If you do not have a diskette drive, you can install Intel Rapid Storage Technology Driver by the following alternative procedure:

Note: If you select **AHCI** for Serial ATA (SATA) in the ThinkPad Setup before installing Intel Rapid Storage Technology Driver, your computer will not respond; it will only display a blue screen.

1. Start the ThinkPad Setup.
2. Select **Config**.
3. Select **Serial ATA (SATA)**.
4. Select **Compatibility**.
5. Change the startup sequence of your computer. Select **Startup** menu.
6. Select **UEFI/Legacy Boot**.
7. Select **Legacy Only** or **Both**.
8. Press F10.
9. Insert the installation CD for Windows XP integrated with Service Pack 2 into the CD or DVD drive, and restart the computer.
10. Complete the installation of Windows XP Service Pack 2 by following OS installing instructions.
11. Install Windows XP Service Pack 3. You can install the Windows XP Service Pack 3 using the *Windows XP Service Pack 3 Installation* CD or download it from either Microsoft Download Center or Microsoft Windows update Web site.
12. Run Intel Rapid Storage Technology Driver. To do this, go to `C:\DRIVERS\WIN\IRST\PREPARE`, and double-click install.cmd.
13. Turn the computer off and then on again.
14. Start the ThinkPad Setup.
15. Select **Config**.
16. Select **Serial ATA (SATA)**.
17. Select **AHCI**.
18. Start Windows XP. The Welcome to the Found New Hardware Wizard appears.
19. Select **No, not this time**, and then click **Next**.
20. Select **Install from a list or specific location (Advanced)**, and then click **Next**.
21. Select **Search for the best driver in these locations.** Then select **Include this location in the search:**, specify the path, `C:\DRIVERS\WIN\IRST`, and click **Next**. The Completing the Found New Hardware Wizard appears.
22. Click **Finish**.

23. When the System Settings Change window appears, click **Yes**. The computer restarts.
24. Install the Intel Chipset Support for Windows 2000/XP/Vista/7. To do this, refer to “Installing Intel Chipset Support for Windows 2000/XP/Vista/7” on page 180.
25. Apply the PCMCIA Power Policy Registry Patch. To do this, go to `C:\SWTOOLS\OSFIXES\PCMCIAPW\`, double-click install.bat, and then follow the instructions that appear on the screen.
26. Install device drivers. To do this, refer to “Installing drivers and software” on page 181.

Installing device drivers

To install device drivers, refer to the web site:
http://www.lenovo.com/support

Installing the driver for the 4-in-1 Media Card Reader

To use the 4-in-1 Media Card Reader, you need to download and install the Ricoh Multi Card Reader Driver for Windows XP/Vista x86/x64. To download it, go to Lenovo Web site at:
http://www.lenovo.com/support/site.wss/document.do?sitestyle=lenovo&lndocid=tpad-matrix

Note: If you are installing Windows XP anew, be sure to install RICOH SD/MMC Bus Host Adapter driver for Windows 2000/XP 77sp05ww first. To download it, visit Lenovo Web site athttp://www.lenovo.com/support/site.wss/document.do?sitestyle=lenovo&lndocid=tpad-matrix, and then install the driver.

To install the driver, do as follows:

1. Click **Start** → **All Programs** → **Accessories** → **Command Prompt**. The DOS prompt window appears.
2. Type `StandardInstall.bat` at the DOS prompt. The Welcome to the Device Driver Installation Wizard for the RICOH Media Driver opens.
3. Click **Next**. If the device driver is already installed, click **No**. Otherwise, follow the instructions on the screen.

Installing the driver for USB 3.0

If your computer supports USB 3.0, and you have reinstalled the operating system, you need to download and install the USB 3.0 driver to use the USB 3.0. Do the following:

For Windows 7 and Windows Vista

1. Access Lenovo Web site at
http://www.lenovo.com/support/site.wss/document.do?sitestyle=lenovo&lndocid=HOME-LENOVO
When you get to the site, find your model and display the driver links.
2. Select the USB 3.0 driver for 32-bit or 64-bit and extract it to your local hard disk.
3. Double-click Setup.exe in `C:\DRIVERS\WIN\USB3.0\`.
4. Click **Next**. If the device driver is already installed, click **Cancel**. Follow the instructions on the screen until the installation is finished.

For Windows XP

1. Access Lenovo Web site at
http://www.lenovo.com/support/site.wss/document.do?sitestyle=lenovo&lndocid=HOME-LENOVO.
When you get to the site, find your model and display the driver links.
2. Select the USB 3.0 driver for 32-bit and extract it to your local hard disk.
3. Double-click Setup.exe in `C:\DRIVERS\WIN\USB3.0\`.

4. Click **Next**. If the device driver is already installed, click **Cancel**. Follow the instructions on the screen until the installation is finished.

Installing ThinkPad Monitor File for Windows 2000/XP/Vista/7

ThinkPad Monitor File for Windows 2000/XP/Vista/7 is in the following directory: `C:\SWTOOLS\DRIVERS\MONITOR`.

Note: If you cannot find this directory on your hard disk drive or solid state drive, download the ThinkPad Monitor File for Windows 2000/XP/Vista/7 from the ThinkPad Web site at: http://www.lenovo.com/support/site.wss/document.do?sitestyle=lenovo&lndocid=tpad-matrix

Note: Before you install this file, make sure that the correct video driver has been installed.

For Windows 7

1. Right-click on the desktop, and click **Personalize**.
2. Click **Display** at the left.
3. Click **Change display settings**.
4. Click **Advanced Settings**.
5. Click the **Monitor** tab.
6. Click **Properties**.
7. Click the **Driver** tab.
8. Click **Update Driver**.
9. Select **Browse my computer for driver software**, and then click **Let me pick from a list of device drivers on my computer**.
10. Click **Have Disk**.
11. Specify path "`C:\SWTOOLS\DRIVERS\MONITOR`" to this monitor INF then click **Open**.
12. Click **OK**.
13. Confirm the correct display type, then click **Next**.
14. Windows has finished installing. Click **Close**.
15. Click **Close** for Display Properties.
16. Click **OK** in the **Monitor** tab.
17. Click **OK** and close the Display Settings window.

For Windows Vista

1. Right-click on the desktop, and click **Personalize**.
2. Click **Display Settings**. The Display Settings window opens.
3. Click **Advanced Settings**.
4. Click the **Monitor** tab.
5. Click **Properties**. (For Windows Vista, also click **Continue**.)
6. Click the **Driver** tab.
7. Click **Update Driver**.
8. Select **Browse my computer for driver software**, and then click **Let me pick from a list of device drivers on my computer**.
9. Click **Have Disk**.
10. Specify path "`C:\SWTOOLS\DRIVERS\MONITOR`" to this monitor INF then click **Open**.

11. Click **OK**.
12. Confirm the correct display type, then click **Next**.
13. Windows has finished installing. Click **Close**.
14. Click **Close** for Display Properties.
15. Click **OK** in the **Monitor** tab.
16. Click **OK** and close the Display Settings window.

For Windows XP

1. Right-click on the desktop and select **Properties** from the pop-up menu.
2. Select the **Settings** tab.
3. Click the **Advanced** tab.
4. Select the **Monitor** tab.
5. Select **Plug and Play Monitor from the monitor type list**.
6. Click **Properties**.
7. Select the **Driver** tab and click **Update Driver**. The Hardware Update Wizard starts.
8. Select **No, not this time** for Windows Update connection, and then click **Next**.
9. Select **Install from a list or specific location (Advanced)**.
10. Click **Next**.
11. Select **Don't search, I will choose the driver to install**.
12. Click **Next**.
13. Click **Have Disk**.
14. Click **Browse**.
15. Specify "`C:\SWTOOLS\DRIVERS\MONITOR`" as location directory and select TPLCD.INF.
16. Click **OK**.
17. System will show ThinkPad Display. Click **Next**. System will copy ThinkPad Monitor INF file and color profile.
18. Click **Finish** and then **Close**.
19. Click the **Color Management** tab.
20. Click **Add**.
21. Select TPFLX.ICM or TPLCD.ICM and click **Add**.
22. Click **OK** and close the Display Properties window.

Installing Intel Chipset Support for Windows 2000/XP/Vista/7

Before you begin

Before you install the operating system, Copy all the subdirectories and files in the `C:\SWTOOLS` directory to a removable storage device, to avoid losing files during the installation.

To install Intel Chipset Support for Windows 2000/XP/Vista/7, do the following:

1. Restore `C:\SWTOOLS` from the backup copy you made before starting the installation.
2. Run infinst_autol.exe in `C:\SWTOOLS\DRIVERS\INTELINF`.

Installing drivers and software

The device drivers are provided in the `C:\SWTOOLS\DRIVERS` directory on your hard disk drive. You will also need to install application software, which is provided in the `C:\SWTOOLS\APPS` directory on your hard disk drive. To do this, refer to the instructions in “Reinstalling preinstalled applications and device drivers” on page 112.

Note: If you cannot find the Supplement files, device drivers, and application software you need on your hard disk drive, or if you want to receive updates and the latest information about them, refer to the ThinkPad Web site at:
http://www.lenovo.com/support/site.wss/document.do?sitestyle=lenovo&lndocid=tpad-matrix

ThinkPad Setup

Your computer provides a program, called ThinkPad Setup, that enables you to select various setup parameters.

To start ThinkPad Setup, do as follows:

1. To protect yourself against accidental loss of data, back up your computer registry. See “Performing backup and recovery operations” on page 109.
2. If the diskette drive is connected to the computer, remove any diskette from the diskette drive, and then turn off the computer.
3. Turn on the computer. When the logo screen is displayed, press the F1 key. The ThinkPad Setup opens.

   If you have set a supervisor password, the ThinkPad Setup menu appears after you enter the password. You can start the ThinkPad Setup by pressing Enter instead of entering the supervisor password; however, you cannot change the parameters that are protected by the supervisor password. For more information, refer to “Using Passwords” on page 89.

   An example of the ThinkPad Setup menu is shown as below:

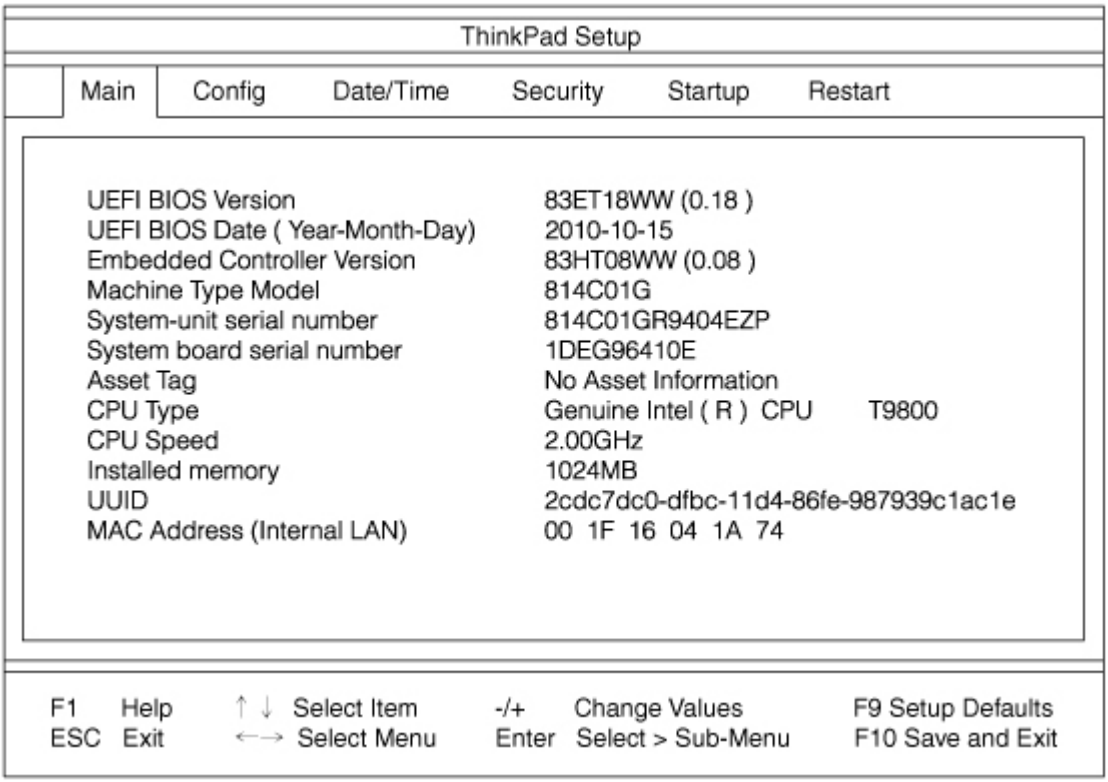

4. Using the cursor keys, move to an item you want to change. When the item you want is highlighted, press Enter. A submenu is displayed.
5. Change the items you wish to change. To change the value of an item, press +/-. If the item has a submenu, you can display it by pressing Enter.
6. Press Esc to exit from the submenu.
7. If you are in a nested submenu, press Esc repeatedly until you reach the ThinkPad Setup menu.

   Note: If you need to restore the settings to their original state as of the time of purchase, press F9 to load the default settings. You can also select an option in the Restart submenu to load the default settings or discard the changes.
8. Select **Restart**. Move the cursor to the option you want for restarting your computer; then press **Enter**. Your computer restarts.

Config menu

If you need to change the configuration of your computer, select **Config** from the ThinkPad Setup menu.

Notes:

- The default settings are already optimized for you. If you consider changing the computer configuration, proceed with extreme caution. Setting the configuration incorrectly might cause unexpected results.
- In each submenu, press the Enter key to show selectable options and select a desired option by using cursor key, or type desired values from the keyboard directly.

The following submenu is displayed:

- **Network**: Set the LAN related functions.
- **USB**: Enable or disable USB related functions.
- **Keyboard/Mouse**: Set the keyboard and the mouse related functions.
- **Display**: Specify the settings for display output.
- **Power**: Set power management related functions.
- **Beep and Alarm**: Enable or disable the audio related functions.
- **Serial ATA (SATA)**: Specify the settings for the hard disk drive.
- **CPU**: Specify the settings for the CPU.
- **Intel AMT**: Set the Intel® AMT related functions.

Date and time menu

If you need to set the current date and time of your computer, select **Date/Time** from the ThinkPad Setup menu. The following submenu is displayed:

- System Date
- System Time

To change the date and time, do the following:

1. Using the up and down arrow keys, select the item to change-date or time.
2. Press Tab, Shift Tab, or Enter to select a field.
3. Type the date or time.

   Note: Another way to adjust date and time is press the - or + key.

Security menu

If you need to set the security features of your computer, select **Security** from the ThinkPad Setup menu.

Notes:

- The default settings are already optimized for you. If you consider changing the computer configuration, proceed with extreme caution. Setting the configuration incorrectly might cause unexpected results.
- In each submenu, you can enable a function by selecting **Enabled**, or disable it by selecting **Disabled**.

The following submenu is displayed:

- **Password**: Set a password related functions.
- **Fingerprint**: Set the fingerprint reader related functions.
- **Security Chip**: Set the security chip related functions.
- **UEFI BIOS Update Option**: Specify the settings for Flash UEFI BIOS update.
- **Memory Protection**: Specify the settings for the Data Execution Prevention feature.
- **Virtualization**: Enable or disable the settings for Intel Virtualization Technology and Intel VT-d Feature.
- **I/O Port Access**: Enable or disable the access to individual I/O ports.
- **Anti-Theft**: Enable or disable UEFI BIOS interface to activate Anti-Theft services, such as Intel AT and Computrace.

To set a password related functions, go to the Security menu and select **Password**. The following submenu is displayed:

- **Hardware Password Manager**
- **Supervisor Password**
- **Lock UEFI BIOS Settings**
- **Set Minimum Length**
- **Password at unattended boot**
- **Password at restart**
- **Power-On Password**
- **Hard Disk x Password**

Notes:

- **Hard Disk 1** means the hard disk drive built into your computer.
- **Hard Disk 2** appears on the Password submenu only if a hard disk drive is installed in the serial Ultrabay enhanced.

If you select and enable **Hardware Password Manager**, you can manage your power-on password, supervisor password, and your hard disk passwords by the management server. By default, this is set to **Enabled**.

Lock UEFI BIOS Settings enable or disable the function that protects items in the ThinkPad Setup from being changed by a user who does not have the supervisor password. By default, this is set to **Disabled**. If you set the supervisor password and enable this function, no one but you can change any items in the ThinkPad Setup.

If you select **Set Minimum Length**, you can specify a minimum length for power-on passwords and hard disk passwords. By default, this is set to **Disabled**. If you set the supervisor password and specify a minimum length for passwords, no one but you can change the length.

If you select and enable **Password at unattended boot**, a password prompt is displayed when the computer is turned on, from either a power-off state or hibernation, by an unattended event such as Wake on LAN®. If you select **Disabled**, no password prompt is displayed; the computer goes ahead and loads the operating system. To prevent unauthorized access, set the user authentication on the operating system.

If you select and enable **Password at restart**, a password prompt is displayed when you restart the computer. If you select **Disabled**, no password prompt is displayed; the computer goes ahead and loads the operating system. To prevent unauthorized access, set the user authentication on the operating system.

Startup menu

You may need to change the startup sequence of your computer. For example, if you have different operating systems on different devices, you can have the system start up from either of them.

Attention: After you change your startup sequence, you must be extremely careful not to specify a wrong device during a copy, a save, or a format operation. If you specify a wrong device, your data and programs might be erased or overwritten.

Attention: If you are using the BitLocker drive encryption, you should not change the startup sequence. BitLocker drive encryption detects the change of startup sequence and locks the computer from booting.

Changing the startup sequence

Selecting the **Startup** to display the **Boot** submenu.

To change the startup sequence, do the following:

1. Select **Boot**; then press Enter.
   - You can use the **Boot** submenu to specify the startup sequence that runs when you turn on the power. Refer to “Boot submenu” on page 184.
   - You can use the **Network Boot** to specify the top priority boot device that runs when **Wake on LAN** is commonly used by LAN administrators in corporate networks to get remote access to your computer. Refer to “Network Boot” on page 185.
2. Select the device you want to start first.

   Use these keys to set the order that the UEFI BIOS will use when starting an operating system:
   - + or - key moves the device up or down.
3. Press F10 to save the changes and restart the system.

To change the startup sequence temporarily so that the system starts up from a different drive, do the following:

1. Turn off the computer.
2. Turn on the computer; then, while the “To interrupt normal startup, press the blue ThinkVantage button” message is displayed at the lower-left of the screen, press F12.
3. Select the device you want to start first from the **Boot** menu.

   Note: The **Boot** menu is also shown when the system cannot boot from any devices or operating system was not found.

Boot submenu

The following list, showing the order in which devices will be started up, is always displayed. Even devices that are not attached to or installed on your computer are listed. For each device that is attached to or installed on the computer, information about it is presented after the colon.

1. USB CD:

2. USB FDD:
3. ATAPI CD0:
4. ATA HDD0:
5. ATA HDD1:
6. ATA HDD2:
7. USB HDD:
8. PCI LAN:
9. ATAPI CD1:
10. ATAPI CD2:
11. ATA HDD3:
12. ATA HDD4:
13. Other CD:
14. Other HDD:

Network Boot

Use the **Network Boot** to select the boot device when the system wakes from LAN. If **Wake-on-LAN** is enabled, the network administrator can turn on all of the computers in a LAN remotely by use of network management software.

Other items in the Startup menu

The following items are also displayed in the **Startup** menu of the ThinkPad Setup:

- **UEFI/Legacy Boot**: Select system boot capability.
- **UEFI/Legacy Boot Priority**: Select priority of boot option between UEFI and Legacy.
- **Boot Mode**: Enable or disable the diagnostics boot mode.
- **Option Key Display**: Choose whether to show the option key message when the system is booted.
- **Boot device List F12 Option**: Choose whether to show the pop-up list of the boot devices.
- **Boot Order Lock**: Enable or disable the Boot Priority Order lock.

Restart menu

If you need to close the ThinkPad Setup and restart the system, select **Restart** from the ThinkPad Setup menu. The following submenu is displayed:

- **Exit Saving Changes**: Restart the system after saving the changes.
- **Exit Discarding Changes**: Restart the system without saving the changes.
- **Load Setup Defaults**: Load the default setting that was in effect at the time of purchase.
- **Discard Changes**: Discard the changes.
- **Save Changes**: Save the changes.

ThinkPad Setup items

The following tables show the contents of the “Config menu items” on page 186, the “Security menu items” on page 192, and the “Startup menu” on page 196 of the ThinkPad Setup.

Note: Some items are displayed on the menu only if the computer supports the corresponding features.

Notes:

- **Enabled** means that the function is configured.
- **Disabled** means that the function is not configured.
- Default values are in **boldface**.

Config menu items

Table 6. Config menu items

Menu item	Submenu item	Selection	Comments
Network	Wake On LAN	• Disabled • **AC only** • AC and Battery	Enable the system to Power on when the Ethernet controller receives a magic packet. If you select “AC Only”, Wake On LAN is enabled only when ac power adapter is attached. If you select “AC and Battery”, Wake On LAN is enabled with any power sources. **Note:** AC is required with magic packet type Wake On LAN. **Note:** Wake On LAN function does not work when a hard disk password is set.
	Ethernet LAN Option ROM	• Disabled • **Enabled**	Load the Ethernet LAN Option ROM to enable startup from an integrated network device.
USB	USB UEFI BIOS Support	• Disabled • **Enabled**	Enable or disable boot support for USB diskette, USB memory key, and USB optical drive.
	Always On USB	• Disabled • **Enabled**	If you select “Enabled”, the external USB devices can be charged via USB ports even when the system is in low power mode (standby, hibernate, or power-off).

Table 6. Config menu items (continued)

Menu item	Submenu item	Selection	Comments
	Always On USB Charge in off mode	• **Disabled** • Enabled	If you select “Enabled”, the Always On USB connector enables you to charge some devices, such as iPod and iPhone and BlackBerry smartphones. **Note:** If you want to charge these devices when your computer is in hibernation mode or powered off, you will need to open the Power Manager program and configure corresponding settings to enable the Always On USB connector function. For details about how to enable the Always On USB connector function, refer to the online help of the Power Manager program.
Keyboard/Mouse	TrackPoint	• Disabled • **Enabled**	Enable or disable the built-in TrackPoint. **Note:** If you want to use an external mouse, select “Disabled.”
	Touch Pad	• Disabled • **Enabled**	Enable or disable the built-in touch pad. **Note:** If you want to use an external mouse, select “Disabled.”
	Fn and Ctrl Key swap	• **Disabled** • Enabled	If you select “Enabled”, the Fn key works as the Ctrl key, and the Ctrl key works as the Fn key. **Note:** Even when “Enabled” is selected, you need to press the Fn key to return the computer from sleep mode to normal operation.

Table 6. Config menu items (continued)

Menu item	Submenu item	Selection	Comments
	Fn Key Lock	• **Disabled** • Enabled	If you select “Enabled”, you can press the Fn key to keep it in a pressed condition, and then press the desired function key. The action is equivalent to pressing the required key and the Fn key simultaneously. If you press the Fn key twice, the state is locked until you press the Fn key again.
	ThinkPad NumLock	• **Independent** • Synchronized	If you select “Independent”, NumLock on your computer can be disabled independently regardless of the NumLock state of the external keyboard. If NumLock on the computer is enabled, NumLock on the external keyboard will also be enabled. If you select “Synchronized”, NumLock on your computer and NumLock on the external keyboard are synchronized.
	Power-On NumLock	• **Automatic** • On • Off	If you select “Automatic”, NumLock is enabled when full size keyboard is attached. If you select “On”, NumLock is always enabled. If you select “Off”, NumLock is always disabled. **Note:** Power-On NumLock will be displayed if you select “Synchronized” at the **ThinkPad NumLock**.

Table 6. Config menu items (continued)

Menu item	Submenu item	Selection	Comments
Display	Boot Display Device	• **ThinkPad LCD** • Analog (VGA) • Digital on ThinkPad • Digital 1 on dock • Digital 2 on dock	Select the display device that is to be active at boot time. This selection is effective for boot time, password prompt, and ThinkPad Setup. “Digital on Thinkpad” is DisplayPort on your computer. “Digial 1 on dock” and “Digital 2 on dock” are DisplayPort or DVI on docking station.
	Graphics Device	• Integrated Graphics • Discrete Graphics • **NVIDIA Optimus**	Integrated Graphics will achieve longer battery life, and Discrete Graphics enhances performance. NVIDIA Optimus runs as Integrated Graphics mode and Discrete Graphics is enabled on demand. **Note:** NVIDIA Optimus mode should only be selected if you are using a Windows 7 model.
	OS Detection for NVIDIA Optimus	• Disabled • **Enabled**	System BIOS automatically switches Graphics device setting to NVIDIA Optimus mode if the OS supports the feature, and to Discrete Graphics if the OS does not support it.
Power	Intel SpeedStep® technology (Intel SpeedStep mounted models only)	• Disabled • **Enabled** Mode for AC • **Maximum Performance** • Battery Optimized Mode for Battery • Maximum Performance • **Battery Optimized**	Select the mode of Intel SpeedStep technology at runtime. **Maximum Performance**: Always highest speed **Battery Optimized**: Always lowest speed **Disabled**: No runtime support, lowest speed

Table 6. Config menu items (continued)

Menu item	Submenu item	Selection	Comments
	Adaptive Thermal Management	Scheme for AC • **Maximize Performance** • Balanced Scheme for Battery • Maximize Performance • **Balanced**	This selects a thermal management scheme to use. **Maximize Performance**: Reduces CPU throttling **Balanced**: Balances sound, temperature and performance **Note:** Each scheme affects fan sound, temperature, and performance.
	Optical Drive Speed	• High Performance • **Normal** • Silent	Set the speed of optical drive to the desired performance.
	CPU Power Management	• Disabled • **Enabled**	Enable or disable the power saving feature that stop the microprocessor clock automatically when there are no system activities. Normally, it is not necessary to change the setting.
	PCI Express Power Management	• Disabled • **Enabled**	Enable or disable a feature that automatically adjusts power management when there is no PCI Express activity. Normally, it is not necessary to change the setting.
	Power On with AC Attach	• **Disabled** • Enabled	Enable or disable a feature that powers on the system when AC is attached. If you select “Enabled”, the system is powered on when AC is attached. When the system is in hibernate state, the system resumes. If you select “Disabled”, the system is not powered on nor resumed when AC is attached.

Table 6. Config menu items (continued)

Menu item	Submenu item	Selection	Comments
Beep and Alarm	Power Control Beep	• Disabled • **Enabled**	If this function is enabled, a beep sounds when the computer enters a power management mode, when it resumes operational mode, and when the ac power adapter is connected or disconnected.
	Low Battery Alarm	• Disabled • **Enabled**	Enable or disable the low battery alarm.
	Password Beep	• **Disabled** • Enabled	Enable this option to have a beep sound when the system is waiting for a power-on, hard disk, or supervisor password. Different beeps will be sounded when the entered password matches or does not match the configured password.
	Keyboard Beep	• **Enabled** • Disabled	Enable or disable keyboard beep when unmanageable key combinations are pressed.
Serial ATA (SATA)	SATA Controller Mode Option	• Compatibility • **AHCI** • RAID	Select SATA controller operation mode. If your system supports RAID, select “RAID.” If you select “Compatibility mode”, serial SATA controller operates in compatibility mode.
CPU	Core Multi-Processing	• Disabled • **Enabled**	Enable or disable additional execution core units within a CPU. **Note:** If you are using a computer with a single-core processor, this item does not appear. **Note:** For Core Multi-Processing, refer to the instructions in “Installing Windows XP” on page 176.
	Intel Hyper-Threading Technology	• Disabled • **Enabled**	Enable or disable additional logical processors within a processor core.

Table 6. Config menu items (continued)

Menu item	Submenu item	Selection	Comments
Intel AMT	Intel AMT Control	• Disabled • **Enabled**	If you select “Enabled”, Intel AMT (Active Management Technology) is configured and additional setup items are provided in MEBx (Management Engine BIOS Extension) Setup. **Note:** You can enter MEBx Setup menu by pressing Ctrl-P key combination in Startup Interrupt Menu. To display the Startup Interrupt Menu, press ThinkVantage button or Enter key during POST.
	CIRA Timeout	**0**-255	Set timeout option for CIRA connection to be established. 1 though 254 seconds are selectable. If you select “0”, use 60 seconds as default timeout value. If you select “255”, waiting time for establishing a connection is unlimited.
	Console Type	• PC-ANSI • **VT100+** • VT-UTF8	Select the console type for AMT. **Note:** This console type should match the Intel AMT remote console.

Security menu items

Table 7. Security menu items

Menu item	Submenu item	Selection	Comments
Password			Refer to “Security menu” on page 183 and “Using passwords” on page 89.
Fingerprint	Predesktop Authentication	• Disabled • **Enabled**	Enable or disable fingerprint authentication before the operating system is loaded.
	Reader Priority	• **External → Internal** • Internal Only	If **External → Internal** is selected, an external fingerprint reader is used if attached. Otherwise, an internal fingerprint reader is used. If Internal Only is selected, an internal fingerprint reader is used.

Table 7. Security menu items (continued)

Menu item	Submenu item	Selection	Comments
	Security Mode	• **Normal** • High	If fingerprint authentication fails, you can still start the computer by entering a password. If you have selected “Normal”, enter a power-on password or a supervisor password; if you have selected “High”, enter a supervisor password.
	Password Authentication	• Disabled • **Enabled**	Enable or disable password authentication. If high security mode is selected, this item appears.
	Reset Fingerprint Data	• **Enter**	This option is used to erase all fingerprint data stored in the fingerprint reader and reset settings to the factory state (ex. Power-on security, LEDs, etc.) As a result, any power-on security features previously enabled will not be able to work until they are re-enabled in the fingerprint software.
Security Chip	Security Chip	• Active • **Inactive** • Disabled	If you select “Active”, Security Chip is functional. If you select “Inactive”, Security Chip is visible, but is not functional. If you select “Disabled”, Security Chip is hidden and is not functional.
	Security Reporting Options		Enable or disable the following Security Reporting Options. • BIOS ROM String Reporting: BIOS text string • ESCD Reporting: Extended system configuration data • CMOS Reporting: CMOS data • NVRAM Reporting: Security data stored in the Asset ID • SMBIOS Reporting: SMBIOS data

Table 7. Security menu items (continued)

Menu item	Submenu item	Selection	Comments
	Clear Security Chip	• **Enter**	Clear the encryption key. **Note:** Only if you select "Active" for Security Chip, this item appears.
	Intel TXT Feature	• **Disabled** • Enabled	Enable or disable Intel Trusted Execution Technology.
UEFI BIOS Update Option	Flash BIOS Updating by End-Users	• Disabled • **Enabled**	If you select "Enabled", all users can update the UEFI BIOS. If you select "Disabled", only the person who knows supervisor password can update the UEFI BIOS.
	Flash Over LAN	• Disabled • **Enabled**	Enable your computer's UEFI BIOS to be updated (flashed) over an active network connection.
Memory Protection	Execution Prevention	• Disabled • **Enabled**	Some computer viruses and worms cause memory buffers to overflow by running code where only data is allowed. If the Data Execution Prevention feature can be used with your operating system, then by selecting "Enabled" you can protect your computer against attacks by such viruses and worms. If after choosing "Enabled" you find that an application program does not run correctly, select "Disabled" and reset the setting.
Virtualization	Intel Virtualization Technology	• **Disabled** • Enabled	If you select "Enabled," a VMM (Virtual Machine Monitor) can utilize the additional hardware capabilities provided by Intel Virtualization Technology.
	Intel VT-d Feature	• **Disabled** • Enabled	Intel VT-d is Intel Virtualization Technology for Directed I/O. When enabled, a VMM can utilize the platform infrastructure for I/O virtualization.

Table 7. Security menu items (continued)

Menu item	Submenu item	Selection	Comments
I/O Port Access	Ethernet LAN	• Disabled • **Enabled**	If you select “Enabled”, you can use the Ethernet LAN device.
	Wireless LAN	• Disabled • **Enabled**	If you select “Enabled”, you can use the Wireless LAN device.
	WiMAX	• Disabled • **Enabled**	If you select “Enabled”, you can use the WiMAX device.
	Wireless WAN	• Disabled • **Enabled**	If you select “Enabled”, you can use the Wireless WAN device.
	Bluetooth	• Disabled • **Enabled**	If you select “Enabled”, you can use the *Bluetooth* device.
	Modem	• Disabled • **Enabled**	If you select “Enabled”, you can use the Modem device.
	USB Port	• Disabled • **Enabled**	If you select “Enabled”, you can use the USB port.
	IEEE 1394	• Disabled • **Enabled**	If you select “Enabled”, you can use the IEEE 1394 (Firewire) device.
	ExpressCard Slot	• Disabled • **Enabled**	If you select “Enabled”, you can use the ExpressCard Slot.
	Ultrabay (HDD/Optical)	• Disabled • **Enabled**	If you select “Enabled”, you can use the Ultrabay (HDD/Optical) device.
	eSATA Port	• Disabled • **Enabled**	If you select “Enabled”, you can use the eSATA Port.
	Memory Card Slot	• Disabled • **Enabled**	If you select “Enabled”, you can use the Memory Card slot (SD Card/MultiMediaCard).
	Integrated Camera	• Disabled • **Enabled**	If you select “Enabled”, you can use the Integrated Camera.
	Microphone	• Disabled • **Enabled**	If you select “Enabled”, you can use the Microphone (Internal, External, or Line-In).
	Fingerprint Reader	• Disabled • **Enabled**	If you select “Enabled”, you can use the fingerprint reader.

Table 7. Security menu items (continued)

Menu item	Submenu item	Selection	Comments
Anti-Theft	Intel AT Module Activation	• Disabled • **Enabled** • Permanently Disabled	Enable or disable the UEFI BIOS interface to activate Intel AT module that is an optional Anti-Theft service from Intel. **Note:** If you set the Intel AT module activation to “Permanently Disabled”, you will be unable to enable this setting again.
	Computrace Module Activation	• Disabled • **Enabled** • Permanently Disabled	Enable or disable the UEFI BIOS interface to activate Computrace module. Computrace is an optional monitoring service from Absolute Software. **Note:** If you set the Computrace module activation to “Permanently Disabled”, you will be unable to enable this setting again.

Startup menu items

Table 8. Startup menu items

Menu item	Selection	Comments
Boot		Refer to “Startup menu” on page 184.
Network Boot		Refer to “Startup menu” on page 184.
UEFI/Legacy Boot	• **Both** • UEFI Only • Legacy Only	Select system boot capability. • **Both**: System will boot by following **UEFI/Legacy Boot Priority** setting. • **UEFI Only**: System will boot from UEFI enabled OS. • **Legacy Only**: System will boot from any OS other than UEFI enabled OS. **Note:** If you select “UEFI Only”, system cannot boot from the bootable devices which do not have UEFI enabled OS.
UEFI/Legacy Boot Priority	• UEFI First • **Legacy First**	Select priority of boot option between UEFI and Legacy.

Table 8. Startup menu items (continued)

Menu item	Selection	Comments
Boot Mode	• **Quick** • Diagnostics **Note:** You can also enter the "Diagnostic" mode by pressing Esc during POST.	Screen during POST: • **Quick**: ThinkPad Logo screen is displayed. • **Diagnostics**: Text messages are displayed.
Option Keys display (ThinkVantage button message)	• Disabled • **Enabled**	If you select "Disabled", the "To interrupt normal startup, press the blue ThinkVantage button." message is not displayed during POST.
Boot Device List F12 Option	• Disabled • **Enabled**	If you select "Enabled", the F12 key is recognized and the Boot Menu is displayed.
Boot Order Lock	• **Disabled** • Enabled	If you select "Enabled", the Boot Priority Order is locked for your future use.

Updating your system UEFI BIOS

The Unified Extensible Firmware Interface (UEFI) BIOS is a part of the system programs that make up the basic layer of software built into your computer. UEFI BIOS translates the instructions from other software layers.

Your computer system board has a module called electrically erasable programmable read-only memory (EEPROM, also referred to as flash memory). You can update UEFI BIOS and the Configuration/ThinkPad Setup Program by starting your computer with a flash update optical disc or .flash update tool application running on the Windwos environment.

In some instances when you add software, hardware, or a device driver, you may be informed that you need to update your UEFI BIOS in order for the new addition to work properly.

To update your UEFI BIOS, visit this Web site at
http://www.lenovo.com/support/site.wss/document.do?sitestyle=lenovo&lndocid=tpad-matrix
Then follow the instructions on the screen.

Using system management

This section is intended primarily for network administrators.

Your computer is designed for manageability, so that you can redirect more of your resources to better meet your business objectives.

This manageability, or "Total Cost of Ownership" (TCO), enables you to remotely power on your computer, format the hard disk drive, install the software of your choice (for example, Windows XP with user and system-management applications), and have the computer start up and function in the same way as an ordinary desktop PC.

Once the computer is configured and operational, you can manage it by use of software and manageability features already integrated into the client system and the network.

System management

Check the following topics to learn more about features of System Management:

- Desktop Management Interface
- Preboot eXecution Environment
- Wake on LAN
- Resume on incoming call
- Asset ID EEPROM

Desktop Management Interface

The system BIOS (UEFI BIOS) of your computer supports an interface called System Management BIOS Reference Specification (SMBIOS) V2.6.1. SMBIOS provides information about the hardware components of your system. It is the responsibility of the BIOS to supply this database with information about itself and the devices on the system board. This specification documents the standards for getting access to this BIOS information.

Preboot eXecution Environment

Preboot eXecution Environment (PXE) technology makes your computer more manageable (it is PXE 2.1-compliant) by enabling it to boot (load an operating system or another executable image) from a server. Your computer supports the PC functions that PXE requires. For example, with the appropriate LAN card, your computer can be booted from the PXE server.

Note: Remote Program Load (RPL) cannot be used with your computer.

Wake on LAN

A network administrator can use Wake on LAN to turn on a computer from a management console.

When Wake on LAN is used with network management software, many functions, such as data transfer, software updates, and Flash BIOS updates, can be performed remotely without remote attendance. This updating can be done after normal working hours and on weekends, to save time and increase productivity. Users are not interrupted during normal working hours, and LAN traffic is kept to a minimum.

If a computer is turned on by the Wake on LAN function, the Network boot sequence is used.

Resume on incoming call

If your computer is connected to a telephone line and you have specified **Resume on incoming call**, it will return from sleep (standby) mode to normal operation when a telephone call comes in.

To enable your computer to wake up from sleep (standby) mode, do the following:

For Windows 7 and Windows Vista:

1. Click **Start**, and then click **Control Panel**.
2. Click **Hardware and Sound**.
3. Click **Device Manager**. If you are prompted for an administrator password or confirmation, type the password or provide confirmation. The Device Manager window opens.
4. Double-click **Modems** (in Windows Vista, click the **+** mark for **Modems**), and then click your modem.
5. Click the **Power Management** tab.
6. Select the **Allow this device to wake the computer** check box.

For Windows XP:

1. Click **Start**, and then click **Control Panel**.
2. Click **Performance and Maintenance**.
3. Click **System**.
4. Click the **Hardware** tab.
5. Click the **Device Manager** button. The Device Manager window opens.
6. Click the **+** mark for **Modems**, and then click your modem.
7. Click **Action**, and then click **Properties**.
8. Click the **Power Management** tab.
9. Select the **Allow this device to bring the computer out of Standby** check box.

Asset ID EEPROM

The Asset ID EEPROM contains information about the system, including its configuration and the serial numbers of key components. It also includes a number of blank fields in which you can record information about the end users in your network.

Setting management features

To enable the network administrator to control your computer remotely, you must configure the network interface by setting the system-management features in the ThinkPad Setup. That ThinkPad Setup contains the following functions:

- Wake on LAN
- Network boot sequence
- Flash update

If an administrator's password (supervisor password) has been set, you will need to specify it when you start the ThinkPad Setup, so that you can use these functions.

Wake on LAN

When the Wake on LAN feature is enabled on a computer that is connected to a LAN, a network administrator can start the computer remotely from a management console, using remote network-management software.

Setting up in the ThinkPad Setup

To enable or disable Wake on LAN, go to the ThinkPad Setup menu. When your computer is not under the network administrator's system management, you can disable Wake on LAN.

To set this function, do the following:

1. Start the ThinkPad Setup menu.
2. Select **Config**.
3. The Config submenu appears.
4. Select **Network**.
5. The Network item submenu appears.
6. For Wake On LAN, select one of the following: **AC Only**, **AC and Battery**, or **Disabled**.
7. Press F10.

Network Boot sequence

When your computer is turned on remotely, system will try to boot from the device that is selected by **Network Boot** setting, and then follow the boot order list in the **Boot** menu.

To define a sequence:

1. On the ThinkPad Setup menu, select **Startup**. The Startup submenu appears.
2. Select Network Boot and press Enter key to show pop-up boot device list.
3. Select a boot device from the list to make it as top boot priority.
4. Press F10.

Note: If you want to initialize the setting to return to the default startup sequence, press F9. The default settings are automatically reloaded.

Flash update

When a Flash UEFI BIOS update from the network is enabled, a network administrator can remotely update the system programs in your computer from a management console. The following requirements must be met:

- Update Flash from network must also be enabled; the procedure is given below.
- Your computer must be started over the LAN.
- Your computer must be engaged in a Preboot eXecution Environment.
- Network-management software must be installed in the remote administrator's computer.

To enable or disable the Flash update from the network setting, do the following:

1. On the ThinkPad Setup menu, select **Security**. The Security submenu appears.
2. Select **UEFI BIOS Update Option**. The UEFI BIOS Update Option submenu appears.
3. For Flash Over LAN, select either **Enabled** or **Disabled**.
4. Press F10.

Chapter 9. Preventing problems

An important part of owning a ThinkPad notebook is maintenance. With proper care, you can avoid common problems. The following sections provide information that can help you to keep your computer running smoothly.

- “General tips for preventing problems” on page 201
- “Making sure device drivers are current” on page 202
- “Taking care of your computer” on page 203

General tips for preventing problems

1. Check the capacity of your hard disk drive from time to time. If the hard disk drive gets too full, Windows will slow down and might produce errors.

   Note: In Windows 7 and Windows Vista, click **Start** → **Computer**. In Windows XP, click **Start** → **My Computer**.
2. Empty your recycle bin on a regular basis.
3. Use disk defragment tool regularly on your hard disk drive to improve data seek and read times.
4. To free up disk space, uninstall unused application programs.

   Note: You might also want to look for application program duplication or overlapping versions.
5. Clean out your Inbox, Sent, and Trash folders from your e-mail client program.
6. At least once a week, make a point to back up your data. If critical data is present, it is a good idea to perform a daily backup. Lenovo has many backup options available for your computer. Rewritable optical drives are available for most machines and are easily installed.
7. Use or schedule System Restore to take a system snapshot periodically. For more information about System Restore see Chapter 5 “Recovery overview” on page 107.
8. Update device drivers and UEFI BIOS when needed.
9. Profile your machine at http://www.lenovo.com/think/support to keep up to date with current drivers and revisions.
10. Keep up to date for device drivers on other non-Lenovo hardware. You might want to read the device driver information release notes prior to updating for compatibility or known issues.
11. Keep a log book. Entries might include major hardware or software changes, driver updates, minor issues you have experienced and how you resolved them.
12. If you ever need to run a recovery on your computer to return the preload onto the machine, the following tips might help along the way:
    - Remove all external devices such as the printer, keyboard, etc.
    - Make sure that your battery is charged and that you have the ac power connected.
    - Boot into the ThinkPad Setup and load the default settings.
    - Restart the machine and start the recovery.
    - If your machine uses discs as the recovery media, DO NOT remove the disc from the drive until prompted to do so.
13. For suspected hard disk drive issues, refer to “Diagnosing problems” on page 207 and run Lenovo ThinkVantage Toolbox for a diagnostic test of the drive prior to calling the Customer Support Center. If your computer does not start up, download the files to create a bootable self-test media from the following Web site: http://www.lenovo.com/hddtest. Run the test and record any messages or error codes. If the test returns any failing error codes or messages, call the Customer Support Center with the codes or messages and the computer in front of you. A technician will assist you further.

© Copyright Lenovo 2011

14. If required, you can find your country's Customer Support Center at the following Web address: http://www.lenovo.com/support/site.wss/document.do?sitestyle=lenovo&lndocid=migr-4hwse3. When calling the Customer Support Center, please make sure you have your machine model type, serial number and the computer in front of you. Also, if the machine is producing error codes, it is helpful to have the error screen on or the message written down.

Making sure device drivers are current

Device drivers are programs that contain instructions for the operating system about how to operate or "drive" a certain piece of hardware. Each hardware component on your computer has its own specific driver. If you add a new component, the operating system needs to be instructed on how to operate that piece of hardware. After you install the driver, the operating system can recognize the hardware component and understand how to use it.

Note: Because drivers are programs, like any other file on your computer, they are susceptible to corruption and might not perform properly if corruption occurs.

It is not always necessary to download the latest drivers. However, you should download the latest driver for a component if you notice poor performance from that component or if you added a new component. This may eliminate the driver as the potential cause of the problem.

Getting the latest drivers from the Web site

You can download and install updated device drivers from the Lenovo Web site by doing the following:

1. Connect to the Internet.
2. Go to:
   http://www.lenovo.com/support/site.wss/document.do?sitestyle=lenovo&lndocid=tpad-matrix

   Enter the product number of the computer or click Detect my system on the screen.
3. Click **Downloads and drivers**.
4. Follow the directions on the screen and install the necessary software.

Getting the latest drivers using System Update

The System Update program helps you keep the software on your system up-to-date. Update packages are stored on Lenovo servers and can be downloaded from the Lenovo Support Web site. Update packages can contain applications, device drivers, UEFI BIOS flashes, or software updates. When the System Update program connects to the Lenovo Support Web site, the System Update program automatically recognizes the machine type and model of your computer, the installed operating system, and the language of the operating system to determine what updates are available for your computer. The System Update program then displays a list of update packages and categorizes each update as critical, recommended, and optional to help you understand the importance. You have complete control of which updates to download and install. After you select the update packages you want, the System Update program automatically downloads and installs the updates without any further intervention from you.

The System Update program is preinstalled on your computer and is ready to run. The only prerequisite is an active Internet connection. You can start the program manually, or you can use the schedule feature to enable the program to search for updates automatically at specified intervals. You also can predefine scheduled updates to search by severity (critical updates, critical and recommended updates, or all updates) so the list you choose from contains only those update types that are of interest to you.

For more information about how to use the System Update, refer to "System Update" on page 37.

Taking care of your computer

Although your computer is designed to function reliably in normal work environments, you need to use common sense in handling it. By following these important tips, you will get the most use and enjoyment out of your computer.

Be careful about where and how you work

- Store packing materials safely out of the reach of children to prevent the risk of suffocation from plastic bags.
- Keep your computer away from magnets, activated cellular phones, electrical appliances, or speakers (within 13 cm or 5 inch).
- Avoid subjecting your computer to extreme temperatures (below 5°C/41°F or above 35°C/95°F).
- Some appliances, such as certain portable desktop fans or air purifiers, can produce negative ions. If a computer is close to such an appliance, and is exposed for an extended time to air containing negative ions, it may become electrostatically charged. Such a charge may be discharged through your hands when you touch the keyboard or other parts of the computer, or through connectors on I/O devices connected to it. Even though this kind of electrostatic discharge (ESD) is the opposite of a discharge from your body or clothing to the computer, it poses the same risk of a computer malfunction.

Your computer is designed and manufactured to minimize any effects of electrostatic charge. An electrostatic charge above a certain limit, however, can increase the risk of ESD. Therefore, when using the computer close to an appliance that can produce negative ions, give special attention to the following:

- Avoid directly exposing your computer to the air from an appliance that can produce negative ions.
- Keep your computer and peripherals as far as possible from such an appliance.
- Wherever possible, ground your computer to facilitate safe electrostatic discharge.

Note: Not all such appliances cause a significant electrostatic charge.

Be gentle with your computer

- Avoid placing any objects (including paper) between the display and the keyboard or the palm rest.
- Your computer display is designed to be opened and used at an angle slightly greater than 90 degrees. Do not open the display beyond 180 degrees, as this might damage the computer hinge.
- Do not turn your computer over while the ac power adapter is plugged in. This could break the adapter plug.

Carry your computer properly

- Before moving your computer, be sure to remove any media, turn off attached devices, and disconnect cords and cables.
- When picking up your open computer, hold it by the bottom. Do not pick up or hold your computer by the display.

Handle storage media and drives properly

- If your computer comes with an optical drive, do not touch the surface of a disc or the lens on the tray.
- Wait until you hear the CD or DVD click into the center pivot of the drive before closing the tray.
- On your computer, use only optical drives designed for use with the serial Ultrabay enhanced.

  Note: You can install a 9.5-mm-thick serial Ultrabay slim or a 12.7-mm-thick serial Ultrabay enhanced device in the serial Ultrabay enhanced.

- When installing the hard disk drive, solid state drive, or optical drive, follow the instructions shipped with your hardware, and apply pressure only where needed on the device.
- Turn off your computer if you are replacing the hard disk drive or solid state drive.
- When replacing the primary hard disk drive or solid state drive, reattach the cover of the drive slot.
- Store your external and removable hard disk or optical drives in the appropriate containers or packaging when they are not being used.
- Before you install any of the following devices, touch a metal table or a grounded metal object. This action reduces any static electricity from your body. The static electricity could damage the device.
  - Memory module
  - Mini-PCI Card
  - ExpressCard
  - CompactFlash
  - Smart card
  - Memory Card, such as SD Card, SDHC Card, SDXC Card, and MultiMediaCard.

    Note: Not all listed devices are included in your computer.

    This action reduces any static electricity from your body. The static electricity could damage the device.
- When transferring data to or from a flash media card, such as an SD card, do not put your computer in sleep (standby) or hibernation mode before the data transfer is complete. To do so might cause damage to your data.

Take care in setting passwords

- Remember your passwords. If you forget a supervisor or hard disk password, Lenovo will not reset it, and you might have to replace your system board, or hard disk drive or solid state drive.

Care for the fingerprint reader

The following actions could damage the fingerprint reader or cause it not to work properly:

- Scratching the surface of the reader with a hard, pointed object.
- Scraping the surface of the reader with your fingernail or anything hard.
- Using or touching the reader with a dirty finger.

If you notice any of the following conditions, gently clean the surface of the reader with a dry, soft, lint-free cloth:

- The surface of the reader is dirty or stained.
- The surface of the reader is wet.
- The reader often fails to enroll or authenticate your fingerprint.

Register your computer

- Register your ThinkPad products with Lenovo (refer to the Web page: http://www.lenovo.com/register). This can help authorities return your computer to you if it is lost or stolen. Registering your computer also enables Lenovo to notify you about possible technical information and upgrades.

Be sure not to modify your computer

- Only an authorized ThinkPad repair technician should disassemble and repair your computer.
- Do not modify or tape the latches to keep the display open or closed.

Tips on using the built-in modem

- Your computer modem may use only an analog telephone network, or public-switched telephone network (PSTN). Do not connect the modem to a PBX (private branch exchange) or any other digital telephone extension line because this could damage your modem. Analog phone lines are often used in homes, while digital phone lines are often used in hotels or office buildings. If you are not sure which kind of phone line you are using, contact your telephone company.
- Your computer might have both an Ethernet connector and a modem connector. If so, be sure to connect your communication cable to the correct one.

DANGER

To avoid the risk of electrical shock, do not connect the telephone cable to the Ethernet connector.

Cleaning the cover of your computer

Occasionally clean your computer as follows:

1. Prepare a mixture of a gentle kitchen-use detergent (one that does not contain abrasive powder or strong chemicals such as acid or alkaline). Use 5 parts water to 1 part detergent.
2. Absorb the diluted detergent into a sponge.
3. Squeeze excess liquid from the sponge.
4. Wipe the cover with the sponge, using a circular motion and taking care not to let any excess liquid drip.
5. Wipe the surface to remove the detergent.
6. Rinse the sponge with clean running water.
7. Wipe the cover with the clean sponge.
8. Wipe the surface again with a dry, soft lint-free cloth.
9. Wait for the surface to dry completely and remove any fibers from the cloth.

Cleaning your computer keyboard

1. Apply some isopropyl rubbing alcohol to a soft, dust-free cloth.
2. Wipe each keytop surface with the cloth. Wipe the keys one by one; if you wipe several keys at a time, the cloth may hook onto an adjacent key and possibly damage it. Make sure that no liquid drips onto or between the keys.
3. Allow to dry.
4. To remove any crumbs or dust from beneath the keys, you can use a camera blower with a brush or cool air from a hair dryer.

Note: Avoid spraying cleaner directly onto the display or the keyboard.

Cleaning your computer display

1. Gently wipe the display with a dry, soft lint-free cloth. If you see a scratchlike mark on your display, it might be a stain transferred from the keyboard or the TrackPoint pointing stick when the cover was pressed from the outside.
2. Wipe or dust the stain gently with a soft, dry cloth.
3. If the stain remains, moisten a soft, lint-free cloth with water or a 50-50 mixture of isopropyl alcohol and water that does not contain impurities.
4. Wring out as much of the liquid as you can.

5. Wipe the display again; do not let any liquid drip into the computer.
6. Be sure to dry the display before closing it.

Chapter 10. Troubleshooting computer problems

This chapter provides information on helping your solve computer problems.

- “Diagnosing problems” on page 207
- “Troubleshooting” on page 208

Diagnosing problems

If you experience problems with your computer, use the following procedure as a starting point for solving them.

- If you can start up the operating system, see “Using Lenovo ThinkVantage Toolbox” on page 207.
- If you cannot start up the operating system, see “Using Lenovo In-ROM Diagnostics” on page .

Using Lenovo ThinkVantage Toolbox

Note: If your system is running and *User Guide* is accessible, see *User Guide*.

If your computer is not operating properly, you may be able to diagnose the problem by having Lenovo ThinkVantage Toolbox test components of your computer.

To start this program, do as follows:

For Windows 7:

1. Click **Start**.
2. Move the pointer to **Control Panel**, to **System and Security**, and then to **Lenovo - System Health and Diagnostics**.

For Windows Vista and XP:

1. Click **Start**.
2. Move the pointer to **All Programs**, to **ThinkVantage**, and then to **Lenovo ThinkVantage Toolbox**.

If the Lenovo ThinkVantage Toolbox is not installed on your computer, go to http://web.lenovothinkvantagetoolbox.com/, click **Download Lenovo ThinkVantage Toolbox**, and follow the instructions on the screen.

For more information about this program, see the Help for the program.

Running any tests may take up to several minutes or longer. Make sure you have time to run the entire test; do not interrupt the test while it is running. When preparing to contact the Customer Support Center, be sure to print the test log so that you can rapidly provide information to the help technician.

Using Lenovo In-ROM Diagnostics

The In-ROM Diagnostics program is used to detect hardware problems when you cannot start the Windows operating system and all storage devices are unavailable.

To run the In-ROM Diagnostics program, do the following:

1. Turn off your computer.
2. Turn on the computer and press F10 repeatedly at startup.

© Copyright Lenovo 2011

3. After you enter the In-ROM Diagnostics program, select the diagnostic test you want to run. Then, follow the instructions on the screen.

Note: If the program returns any error code, call the Lenovo Customer Support Center, and provide your machine type and model number, serial number, and the error code. For information about how to get your machine type and model number, and serial number, see “Machine type and model label” on page 23. For information about calling the Lenovo Customer Support Center for service, see “Calling Lenovo” on page 236.

Troubleshooting

If your computer has an error, it typically displays a message or an error code, or a beep sounds when you turn it on. To correct an error, first find the description of the error in the left-hand column of the chart that applies. Then click that description to get a troubleshooting procedure.

To make sure that your computer has the features or options that are introduced in the following sections, consult the online help or the list shipped with your computer.

Computer stops responding

Print these instructions now and keep it with your computer for reference later.

If your computer is completely unresponsive (you cannot use the UltraNav pointing device or the keyboard), do the following steps:

1. Push and hold the power switch until the machine turns off. After the computer is turned off, restart by pressing the power switch. If the machine does not turn on, continue to step 2.

   Note: Do not remove the battery and ac power to reset the computer.
2. While the machine is turned off, remove all power sources from the computer (battery and ac power). Hold down the power button for 10 seconds. Plug in the ac power while keeping the battery out of the computer. If the computer does not turn back on, continue to step 3.

   Note: Once the computer starts up and enters Windows, use the proper shutdown procedure to turn the computer off. Once the machine is off, reattach the battery and restart the computer. If the computer does not start with the battery reattached, remove the battery and again start with step 2. If the computer starts with ac power but does not start when the battery is attached, call the Customer Support Center for support.
3. While the machine is off, remove all sources of power from the machine (battery and ac power). Remove all external devices that are attached to your computer (keyboard, mouse, printer, scanner, etc.). Repeat step 2. If step 2 is unsuccessful, continue to step 4.

   Note: The following steps involve removing static sensitive components from your computer. Please make sure that you are properly grounded and remove all sources of power attached to the computer. If you are uncomfortable or unsure about removing components please call the Customer Support Center for assistance.
4. While the computer is off, remove all sources of power and external hardware. Refer to the procedure in “Replacing memory” on page 143 on how to remove and reseat the memory modules. Remove any non-original memory module added to your computer. After removing the extra memory module and reseating the original memory module, repeat step 2. If the computer still does not turn on, consult the user's reference guide for other customer-replaceable components that are attached to your computer.

If the computer still does not start up, call the Customer Support Center and a Customer Support Specialist will assist you.

Spills on the keyboard

With a mobile computer, there are increased chances of spilling liquids on the keyboard. Because most liquids conduct electricity, liquid spilled on the keyboard could create numerous short circuits, potentially causing irreparable damage to your computer.

If you spill something on your computer:

Attention: Be sure that no liquid creates a short circuit between you and the ac power adapter (if in use). Although you might lose some data or work by turning off the computer immediately, leaving the computer on might make your computer unusable.

1. Carefully unplug the ac power adapter immediately.
2. Turn off the computer immediately. If the computer does not turn off, remove the battery. The more quickly you stop the current from passing through the computer the more likely you will reduce damage from short circuits.
3. Wait until you are certain that all the liquid is dry before turning on your computer.

Note: If you want to replace your keyboard, you can purchase a new one.

Error messages

- **Message**: 0176: System Security - The System has been tampered with.

  Solution: This message is displayed if you remove the Security Chip and reinstall it, or install a new one. To clear the error, enter the ThinkPad Setup. If this does not solve the problem, have the computer serviced.

- **Message**: 0177: Bad SVP data, stop POST task.

  Solution: Checksum of the supervisor password in the EEPROM is not correct. The system board should be replaced. Have the computer serviced.

- **Message**: 0182: Bad CRC of Security Settings in EEPROM. Enter ThinkPad Setup.

  Solution: Checksum of the Security settings in the EEPROM is not correct. Enter ThinkPad Setup to check Security settings, Press F10 and then press Enter to restart the system.

  If you still have a problem, have the computer serviced.

- **Message**: 0183: Bad CRC of Security Settings in EFI Variable. Enter ThinkPad Setup.

  Solution: Checksum of the Security settings in the EFI Variable is not correct. Enter ThinkPad Setup to check Security settings, Press F10 and then press Enter to restart the system.

  If you still have a problem, have the computer serviced.

- **Message**: 0187: EAIA data access error

  Solution: The access to EEPROM is failed. Have the computer serviced.

- **Message**: 0188: Invalid RFID Serialization Information Area

  Solution: The EEPROM checksum is not correct (block # 0 and 1). The system board should be replaced, and the box serial number needs to be reinstalled. Have the computer serviced.

- **Message**: 0189: Invalid RFID configuration information area

  Solution: The EEPROM checksum is not correct (block # 4 and 5). The system board should be replace, and the UUID needs to be reinstalled. Have the computer serviced.

- **Message**: 0190: Critical low-battery error

Solution: The computer turned off, because the battery is low. Connect the ac power adapter to the computer and charge the battery, or replace the battery with a fully charged one.

- **Message**: 0191: System Security - Invalid remote change requested

  Solution: The system configuration change has failed. Confirm the operation and try again. To clear the error, enter the ThinkPad Setup.

- **Message**: 0192: System Security - Embedded Security hardware tamper detected

  Solution: The Security Chip has been replaced with a different one. Have the computer serviced.

- **Message**: 0199: System Security - Security password retry count exceeded.

  Solution: This message is displayed if you enter a wrong supervisor password more than three times. Confirm the supervisor password and try again. To clear the error, enter the ThinkPad Setup.

- **Message**: 0251: System CMOS checksum bad - Default configuration used

  Solution: The system CMOS might have been corrupted by an application program. The computer uses the default settings. Run the ThinkPad Setup to reconfigure the settings. If you still see the same error code, have the computer serviced.

- **Message**: 0253: EFI Variable Block Data was destroyed.

  Solution: The system EFI Variable Block Data might have been corrupted.

  1. Press F1 to go to the ThinkPad Setup.
  2. Press F9 and then press Enter to load the default setting.
  3. Press F10 and then press Enter to restart the system.

  If you still have a problem, have the computer serviced.

- **Message**: 0271: Check date and time settings

  Solution: Neither the date nor the time is set in the computer. Set the date and time, using the ThinkPad Setup.

- **Message**: 1802: Unauthorized network card is plugged in - Power off and remove the network card.

  Solution: The mini PCI Express network card is not supported on this computer. Remove it.

- **Message**: 1820: More than one external fingerprint readers are attached.

  Solution: Power off and remove all but the reader that you set up within your main operating system.

- **Message**: 2000: ThinkVantage Active Protection sensor diagnostics failed.

  Solution: ThinkVantage Active Protection sensor is not working correctly. Have the computer serviced.

- **Message**: 2100: Detection error on HDD0 (Main HDD)

  Solution: The hard disk is not working. Have the hard disk serviced.

- **Message**: 2101: Detection error on HDD1 (Ultrabay HDD)

  Solution: The hard disk is not working. Have the hard disk serviced.

- **Message**: 2102: Detection error on HDD2 (Mini SATA)

  Solution: The Mini SATA device is not working. Have the Mini SATA device serviced.

- **Message**: 2110: Read error on HDD0 (Main HDD)

Solution: The hard disk is not working. Have the hard disk serviced.

- **Message**: 2111: Read error on HDD1 (Ultrabay HDD)

  Solution: The hard disk is not working. Have the hard disk serviced.

- **Message**: 2112: Read error on HDD2 (Mini SATA)

  Solution: The Mini SATA device is not working. Have the Mini SATA device serviced.

- **Message**: 2200: Machine Type and Serial Number are invalid.

  Solution: Machine Type and Serial Number are invalid. Have the computer serviced.

- **Message**: 2201: Machine UUID is invalid.

  Solution: Machine UUID is invalid. Have the computer serviced.

- **Message**: The power-on password prompt

  Solution: A power-on password or a supervisor password is set. Type the password and press Enter to use the computer (refer to "Using passwords" on page 89). If the power-on password is not accepted, a supervisor password might have been set. Type the supervisor password and press Enter. If you still see the same error message, have the computer serviced.

- **Message**: The hard disk password prompt

  Solution: A hard disk password is set. Type the password and press Enter to use the computer (refer to "Hard disk passwords" on page 91).

- **Message**: Hibernation error

  Solution: The system configuration changed between the time your computer entered hibernation mode and the time it left this mode, and your computer cannot resume normal operation.

  – Restore the system configuration to what it was before your computer entered hibernation mode.

  – If the memory size has been changed, re-create the hibernation file.

- **Message**: Fan error

  Solution: Cooling fan has failed. Have the computer serviced.

Errors without messages

- **Problem**: My screen keeps blanking when I do not want it to.

  Solution: You can disable any system timers, such as the LCD turn-off timer or the blank timer

  1. Start Power Manager.
  2. Click the **Power plan** tab (in Windows XP, **Power scheme**), and then select **Maximum Performance** from the predefined power plans (in Windows XP, **Power scheme**).

- **Problem**: When I turn on the machine, nothing appears on the screen and the machine does not beep while starting up.

  Note: If you are not sure whether you heard any beeps, turn off the computer by pressing and holding the power switch for 4 seconds or more. Turn it on and listen again.

  Solution: Make sure that:

  – The battery is installed correctly.

- The ac power adapter is connected to the computer and the power cord is plugged into a working electrical outlet.
- The computer is turned on. (Turn the power switch on again for confirmation.)

If a power-on password is set:

- Press any key to display the prompt for the power-on password. If the brightness level of the screen is low, increase it by pressing the Fn+Home.
- Type the correct password and press Enter (refer to Power-on password).

If these items are properly set, and the screen remains blank, have the computer serviced.

- **Problem**: When I turn on the machine, only a white cursor appears on a blank screen.

  Solution: If you have modified a partition on your hard disk drive or solid state drive by using a partition software, information about that partition, or the master boot record may have been destroyed.

  1. Turn off the computer, and then turn it on again.
  2. If you still see only the cursor on the screen, do the following:
     - If you have used the partition software, examine the partition on the hard disk drive or solid state drive by using the software, and recover the partition if required.
     - Use either the Rescue and Recovery workspace or the recovery discs to restore the system to the factory state. For details about restoring the system to the factory state, see “Creating and using recovery media” on page 107.

     If the problem persists, have the computer serviced.

- **Problem**: My screen goes blank while the computer is on.

  Solution: Your screen saver or power management may be enabled. Do either of the following:

  - Touch the TrackPoint or the touch pad, or press a key to exit the screen saver.
  - Press the power switch to resume from sleep (standby) or hibernation.

Beep errors

Table 9. Beep errors

Problem	Solution
One short beep, pause, three short beeps, pause, three more short beeps, and one short beep	Make sure that memory modules are installed correctly. If they are, and you still hear the beeps, have the computer serviced.
One long and two short beeps	The video function has a problem. Have the computer serviced.
Four cycles of four short beeps	The Security Chip has a problem. Have the computer serviced.
Five beeps	The system board has a problem. Have the computer serviced.

Memory problems

Print these instructions now and keep it with your computer for reference later.

If your memory is not operating properly, check the following items:

1. Verify that the memory is installed and seated correctly in your computer.

It may be necessary to remove all added memories to test the computer with only the factory-installed memories, and then reinstall the memory one at a time to ensure a proper connection. For the procedures to remove and reinstall a memory, refer to “Replacing memory” on page 143.

2. Check for error messages during startup.

   Follow the appropriate corrective actions for Power-on self-test (POST) “Error messages” on page 209.

3. Verify that the latest system BIOS (UEFI BIOS) for your model has been installed.
4. Verify the proper memory configuration and compatibility including the maximum memory size and the memory speed.

   For details, refer to the instructions in “Replacing memory” on page 143.

5. Run “Lenovo ThinkVantage Toolbox” on page 207.

Modem and networking

The following are the most common modem and networking problems:

Ethernet problems

- **Problem**: Your computer cannot connect to the network.

  Solution: Make sure that:

  – The cable is installed properly.

    The network cable must be securely connected both to the Ethernet connector of your computer and to the RJ45 connector of the hub. The maximum allowable distance from the computer to hub is 100 meters. If the cable is connected and the distance is within acceptable limits but the problem persists, try a different cable.

  – You are using the correct device driver.

    For Windows 7 and Windows Vista:

    1. Click **Start**, and then click **Control Panel**.
    2. Click **Hardware and Sound**.
    3. Click **Device Manager**. If you are prompted for an administrator password or confirmation, type the password or provide confirmation.
    4. If the **!** mark is to the left of the adapter name under Network adapters, you might not use the correct driver or the driver is not enabled. To update the driver, right-click the highlighted adapter.
    5. Click **Update Driver Software**, and then follow the instructions on the screen.

    For Windows XP:

    1. Click **Start**, and then click **Control Panel**.
    2. Click **Performance and Maintenance**, and then click **System**.
    3. Click the **Hardware** tab, and click the **Device Manager** button.
    4. If the **x** mark is to the left of the adapter name under Network adapter, you might not use the correct driver or the driver is not enabled. To update the driver, right-click the highlighted adapter.
    5. Click **Properties**. The Properties window appears.
    6. Click the **Driver** tab.
    7. Click the **Update Driver** button. The Update Device Driver wizard appears. Follow the instructions on the screen.

  – The switch port and the adapter have the same duplex setting.

If you configured the adapter for full duplex, make sure the switch port is also configured for full duplex. Setting the wrong duplex mode can degrade performance, cause data loss, or result in lost connections.

– You have installed all networking software that is necessary for your network environment.

  Check with your LAN administrator for the necessary networking software.

- **Problem**: The adapter stops working for no apparent reason.

  Solution: The network driver files may be corrupt or missing. Update the driver by referring to the "Solution" description for the procedure to make sure that the correct device driver is installed in the preceding problem.

- **Problem**: If your computer is a Gigabit Ethernet model and you use the a speed of 1000 Mbps, the connection fails or errors occur.

  Solution:

  – Use Category 5 wiring and make sure that the network cable is securely connected.

  – Connect to a 1000 BASE-T hub/switch (not 1000 BASE-X).

- **Problem**: The Wake on LAN (WOL) feature is not working.

  Solution:

  – Make sure that WOL is enabled in the ThinkPad Setup.

  – If it is, check with your LAN administrator for the necessary settings.

- **Problem**: If your computer is a Gigabit Ethernet model, it cannot connect to the network at 1000 Mbps. Instead, it connects at 100 Mbps.

  Solution:

  – Try another cable.

  – Make sure that the link partner is set to auto-negotiate.

  – Make sure that the switch is 802.3ab-compliant (gigabit over copper).

A wireless LAN problem

- **Problem**: You cannot connect using the built-in wireless networking card.

  Solution: Make sure that your wireless LAN driver is the latest version installed. Check the Web site and confirm the driver version supported by Access Connections is the latest documented in the README file.

  Make sure that your computer is within range of a wireless access point.

  Make sure that the wireless radio is enabled by double-clicking the Access Connections icon in the task bar.

  Note: If your computer is a Windows 7 model, to display the Access Connections status icon and the wireless status icon in the system tray, refer to the Access Connections on-line help.

  Check Network Name (SSID), and your encryption information. Use Access Connections to verify this case-sensitive information.

A wireless WAN problem

- **Message**: Unauthorized WAN card is plugged in - Power off and remove the WAN card.

  Solution: The WAN card is not supported on this computer. Remove it.

  Note: Depending on your computer, some models do not have a wireless WAN.

Bluetooth problems

For Windows 7 and Windows Vista

- **Problem**: Sound does not come from the *Bluetooth* headset/headphone but comes from the local speaker even though the headset/headphone is connected using Headset profile or AV profile.

  Solution: Do the following:

  1. Exit the application that uses the sound device (for example, Windows Media Player).
  2. Open the Control Panel by clicking **Start → Control Panel**.
  3. Click **Hardware and Sound → Sound**.
  4. Select the **Playback** tab.
  5. If you are using Headset profile, select ***Bluetooth* Hands-free Audio** and click the **Set Default** button. If you are using AV profile, select **Stereo Audio** and click the **Set Default** button.
  6. Click **OK** to close the Sound window.

- **Problem**: PIM (Personal Information Manager) items sent from Windows 7 and Windows Vista cannot be received correctly into the address book of any other *Bluetooth*-enabled device.

  Solution: Windows 7 and Windows Vista send PIM items in XML format, but most *Bluetooth*-enabled devices handle PIM items in vCard format. If another *Bluetooth*-enabled device can receive a file through *Bluetooth*, a PIM item sent from Windows 7 and Windows Vista might be saved as a file with the extension .contact.

For Windows XP

Notes: If you are using the Microsoft standard *Bluetooth* features and you want to access information about how to use the *Bluetooth* function, do the following:

1. Press Fn+F5 to turn on *Bluetooth*.
2. Click **Start → Control Panel**.
3. Click **Printers and Other Hardware**.
4. Click ***Bluetooth* Devices**.
5. Click the **Options** tab.
6. Click **Learn more about *Bluetooth* Settings**

Note: If you are using the ThinkPad *Bluetooth* with Enhanced Data Rate Software, refer to the following instructions.

Note: Check your connection anytime and make sure that no other *Bluetooth*-enabled device is searching for the device to which you want to connect. Simultaneous searching is not allowed in the *Bluetooth* connection.

- **Problem**: You search for a *Bluetooth*-enabled device by clicking View devices in range in My *Bluetooth* Places, but you cannot find anything.

  Solution: Make sure that the device to which you want to connect is enabled for the *Bluetooth* connection.

  After making sure of the above, turn the *Bluetooth* power off and then on again, or restart your computer. Then search for the device again.

  Note: If you are using the ThinkPad *Bluetooth* with Enhanced Data Rate Software, refer to the following instructions.

- **Problem**: You cannot connect to any *Bluetooth*-enabled device.

  Solution: Make sure that both your computer and the device are turned on and their *Bluetooth* antennas are enabled.

After making sure of the above, turn the *Bluetooth* power off and then on again, or restart your computer. Then re-establish your connection to the device.

If the problem persists, re-install the *Bluetooth* software and reestablish your connection to the device.

- **Problem**: Your computer is connected to a *Bluetooth*-enabled device, but you cannot use any of the services of that device.

  Solution: Make sure that the device is enabled for the *Bluetooth* connection.

  1. Double-click the **My *Bluetooth* Places** icon.
  2. Go to *Bluetooth* Tasks and click **View devices in range**.

  If you cannot find the device, it may have stopped responding. Make sure that it is enabled for the *Bluetooth* connection. If you find it, connect to the services you want.

  If you are sure that the device is responding, turn the *Bluetooth* power off and then on again, or restart your computer. Then try to connect again.

- **Problem**: You cannot pull a business card from the connected computer.

  Solution: Make sure that the connected computer has its own default business card application and that the card is ready for communication.

  Make sure that the security settings on the connected computer allow you to download the business card.

- **Problem**: You cannot send a business card to the connected computer.

  Solution: Make sure that your computer has its own default business card application and that the card is ready for communication.

  Make sure that the security settings on the connected computer allow you to upload your business card.

- **Problem**: Your computer is connected to a *Bluetooth*-enabled computer that works as an FTP server, but you cannot see any files in the FTP server.

  Solution: Check the newly shared files as follows:

  1. In the menu of My *Bluetooth* Places, click **View**.
  2. Click **Update**. The status is updated in the window, so that you can check the newly shared files.

  Make sure that the shared folder in the connected computer contains the files you are looking for.

  Make sure that the security settings on the connected computer allow you to connect and view the files in the computer.

- **Problem**: Your computer is connected to a *Bluetooth*-enabled computer, but you cannot gain access to the network.

  Solution: Make sure that the *Bluetooth*-enabled computer is connected to a network.

  Make sure that the connected computer has been set up to share its network connectivity and that the security settings allow you to connect and establish the remote network access.

- **Problem**: Your computer cannot connect a *Bluetooth*-enabled computer that uses serial port applications.

  Solution: Reestablish a connection with the *Bluetooth*-enabled computer, and try the serial connection again.

- **Problem**: *Bluetooth* serial port was disconnected automatically.

  Solution: When any serial-based connection is established, an inactivity timer starts. If no application opens the port, the connection is ended automatically. This is a normal characteristic of the serial-based connection and is not a defect. If you need the *Bluetooth* serial port, just reconnect it.

- **Problem**: PIM Synchronization failed with an error message “The Synchronization with xxx (*Bluetooth* device name) failed. PIM (Personal Information Manager) Interface failed.”

  Solution: Start a mail application, and set up your e-mail account. **OR**, modify the *Bluetooth* configuration so as not to synchronize e-mail items, as follows:

1. Double-click **My *Bluetooth* Places**.
2. Click ***Bluetooth***, and select ***Bluetooth* Setup Wizard**.
3. Select **I want to configure the *Bluetooth* services that this computer will provide to remote devices.**, and click **Next**.
4. Select **PIM Synchronization**, and click **Configure**.
5. Select **Do Not Synchronize** in the e-mail synchronization selection, and click **OK**.
6. Click **Finish** to close the *Bluetooth* Service Selection window.

- **Problem**: ThinkPad *Bluetooth* with Enhanced Data Rate Software does not function.

  Solution: Do the following:

  1. Turn on *Bluetooth* by pressing Fn+F5.
  2. Click **Start → Control Panel**.
  3. Click the **Performance and Maintenance** icon.
  4. Click the **System** icon.
  5. Click the **Hardware** tab.
  6. Click the **Device Manager** button. The Device Manager window opens.
  7. Check whether the words "*Bluetooth* Device" appear in the device listing in the window.

  If the words "*Bluetooth* Radio" appear in the device listing, the Microsoft *Bluetooth* software is installed on your computer. If you want to use ThinkPad *Bluetooth* with Enhanced Data Rate Software, you have to install it and then replace the *Bluetooth* driver. For more information, see "Using *Bluetooth*" on page 64.

- **Problem**: While looking at the Classic View of the Control Panel, you see two *Bluetooth* icons in the Control Panel.

  Solution: If you have installed the Microsoft *Bluetooth* software before, and you are using ThinkPad *Bluetooth* with Enhanced Data Rate Software, you may find two *Bluetooth* icons in the Control Panel. One is the *Bluetooth* Configuration icon for ThinkPad *Bluetooth* with Enhanced Data Rate Software, and the other is the *Bluetooth* Devices icon for the Microsoft *Bluetooth* software.

- **Problem**: Sound does not come from the *Bluetooth* headset/headphone but comes from the local speaker even though the headset/headphone is connected using Headset profile or AV profile.

  Solution: Do the following:

  1. Exit the application that uses the sound device (for example, Windows Media Player).
  2. Open the Control Panel by clicking **Start → Control Panel**.
  3. Double-click **Sounds and Audio Devices** to open the Sounds and Audio Devices Properties window.
  4. Select the **Audio** tab.
  5. If you are using Headset profile, select ***Bluetooth* Audio** for both Sound playback and Sound recording. If you are using AV profile, select ***Bluetooth* High Quality Audio** for both Sound playback and Sound recording.
  6. Click **OK** to close the Sounds and Audio Devices Properties window.

Keyboard and other pointing devices

The following are the most common keyboard and other pointing devices problems:

UltraNav problems

- **Problem**: The pointer drifts when the computer is turned on or after it resumes normal operation.

Solution: The pointer might drift when you are not using the TrackPoint during normal operation. This is a normal characteristic of the TrackPoint and is not a defect. Pointer drifting might occur for several seconds under the following conditions:

- When the computer is turned on.
- When the computer resumes normal operation.
- When the TrackPoint is pressed for a long time.
- When the temperature changes

- **Problem**: The TrackPoint or touch pad does not work.

  Solution: Make sure that the TrackPoint or touch pad is set to Enabled in the UltraNav Device Setting.

  Note: To open the UltraNav Device Setting, press Fn+F8.

Keyboard problems

- **Problem**: All or some keys on the keyboard do not work.

  Solution: If an external numeric keypad is connected:

  1. Turn off the computer.
  2. Remove the external numeric keypad.
  3. Turn on the computer and try using the keyboard again.

  If the keyboard problem is resolved, carefully reconnect the external numeric keypad, external keyboard, making sure that you have seated the connectors properly.

  If the problem remains, make sure that the correct device driver is installed.

  For Windows 7:

  1. Click **Start** → **Control Panel**. Change the view of the Control Panel from Category to Large icons or Small icons.
  2. Click **Keyboard**.
  3. Select the **Hardware** tab. In the Device Properties, make sure that the Device Status is **This device is working properly**.

  For Windows Vista:

  1. Click **Start** → **Control Panel**.
  2. Click **Hardware and Sound**, and then click Keyboard.
  3. Select the **Hardware** tab. In the Device Properties, make sure that the Device Status is **This device is working properly**.

  For Windows XP:

  1. Click **Start** → **Control Panel**.
  2. Click **Printers and Other Hardware**, and then click **Keyboard**.
  3. Select the **Hardware** tab. In the In the Device Properties, make sure that the Device Status is **This device is working properly**.

  If keys on the keyboard still do not work, have the computer serviced.

- **Problem**: A number appears when you type a letter.

  Solution: The numeric lock function is on. To disable it, press Shift+ScrLk or Fn+NmLk.

- **Problem**: All or some keys on the external numeric keypad do not work.

  Solution: Make sure that the external numeric keypad is correctly connected to the computer.

Display and multimedia devices

This section includes the most common display and multimedia devices problems which are computer screen, external monitor, audio, and optical drive. Check these topics to learn more information.

Computer screen problems

- **Problem**: The screen is blank.

  Solution: Do the following:

  – Press Fn+F7 to bring up the image.

    Note: If you use the Fn+F7 key combination to apply a presentation scheme, press Fn+F7 at least three times in three seconds, and the image is displayed on the computer screen.

  – If you are using the ac power adapter, or using the battery and the battery status indicator is on (is green), press Fn+Home to make the screen brighter.

  – If the sleep (standby) status indicator is on (is green), press Fn to resume from the sleep (standby) mode.

  – If the problem persists, do the Solution in the problem below.

  Note: If your computer is a Windows 7 model, it does not support the presentation scheme.

- **Problem**: The screen is unreadable or distorted.

  Solution: Make sure that:

  – The display device driver is installed correctly.

  – The screen resolution and color quality are correctly set.

  – The monitor type is correct.

  To check these settings, do as follows:

  For Windows 7:

  1. Right-click on the desktop, and click **Personalize**.
  2. Click **Display** at the left.
  3. Select **Change display settings**. Check whether the screen resolution is correctly set.
  4. Click **Advanced Settings**.
  5. Click the **Adapter** tab.
  6. Make sure that the correct device driver name is shown in the adapter information window.

     Note: The device driver name depends on the video chip that has been installed on your computer.
  7. Click the **Properties** button. If you are prompted for an administrator password or confirmation, type the password or provide confirmation. Check the “Device status” box and make sure the device is working properly. If not, click the **Troubleshoot** button. Close the **Properties** window.
  8. Click the **Monitor** tab. Check whether the color quality is correctly set, make sure other information is also correct.
  9. Click the **Properties** button. If you are prompted for an administrator password or confirmation, type the password or provide confirmation. Check the “Device status” box and make sure the device is working properly. If not, click the **Troubleshoot** button.

  For Windows Vista:

  1. Right-click on the desktop, and click **Personalize**.
  2. Click **Display Settings** and check whether the screen resolution and color quality are correctly set.
  3. Click **Advanced Settings**.

4. Click the **Adapter** tab.
5. Make sure that the correct device driver name is shown in the adapter information window.

   Note: The device driver name depends on the video chip that has been installed on your computer.
6. Click the **Properties** button. If you are prompted for an administrator password or confirmation, type the password or provide confirmation. Check the “Device status” box and make sure the device is working properly. If not, click the **Troubleshoot** button.
7. Click the **Monitor** tab.
8. Make sure the information is correct.
9. Click the **Properties** button. If you are prompted for an administrator password or confirmation, type the password or provide confirmation. Check the “Device status” box and make sure the device is working properly. If not, click the **Troubleshoot** button.

For Windows XP:

1. Right-click on the desktop, and click **Properties** to open the Display Properties window.
2. Click the **Settings** tab.
3. Check whether the screen resolution and color quality are correctly set.
4. Click **Advanced**.
5. Click the **Adapter** tab.
6. Make sure that the correct device driver name is shown in the adapter information window.

   Note: The device driver name depends on the video chip that has been installed on your computer.
7. Click the **Properties** button. Check the “Device status” box and make sure the device is working properly. If not, click the **Troubleshoot** button.
8. Click the **Monitor** tab.
9. Make sure the information is correct.
10. Click the **Properties** button. Check the “Device status” box and make sure the device is working properly. If not, click the **Troubleshoot** button.

- **Problem**: Incorrect characters appear on the screen.

  Solution: Did you install the operating system or application program correctly? If they are installed and configured correctly, have the computer serviced.

- **Problem**: The screen stays on even after you turn off your computer.

  Solution: Press and hold the power switch for 4 seconds or over to turn off your computer; then turn it on again.

- **Problem**: Missing, discolored, or bright dots appear on the screen every time you turn on your computer.

  Solution: This is an intrinsic characteristic of the TFT technology. Your computer's display contains multiple thin-film transistors (TFTs). A small number of missing, discolored, or bright dots on the screen might exist all the time.

External monitor problems

- **Problem**: The external monitor is blank.

  Solution: To bring up the image, press Fn+F7 and select the desired monitor. If the problem persists, do the following:

  1. Connect the external monitor to another computer to make sure it works.
  2. Reconnect the external monitor to your computer.

3. Refer to the manual shipped with the external monitor to check the resolutions and refresh rates that are supported.
   - If the external monitor supports the same resolution as the computer display or a higher resolution, view output on the external monitor or on both the external monitor and the computer display.
   - If the external monitor supports a lower resolution than the computer display, view output on the external monitor only. (If you view output on the both the computer display and the external monitor, the external monitor screen will be blank or distorted.)

- **Problem**: You cannot set a higher resolution than the present one on your external monitor.

  Solution:

  - Make sure that monitor information is correct. Do the following:

    For Windows 7:

    1. Right-click on the desktop, and click **Screen resolution**.

       Note: If your computer cannot detect the external monitor, click the **Detect** button.
    2. Click the icon for the desired monitor (the **Monitor-2** icon is for the external monitor).
    3. Click **Advanced Settings**.
    4. Click the **Adapter** tab.
    5. Make sure that the correct device driver name is shown in the adapter information window.

       Note: The device driver name depends on the video chip that has been installed on your computer.
    6. Click **OK**.

    If the information is incorrect, reinstall the device driver. See below for more information.

    For Windows Vista:

    1. Right-click on the desktop and click **Personalize**.
    2. Click **Display Settings**.
    3. Click the **Advanced Settings** button.
    4. Click the **Adapter** tab.
    5. Make sure that the correct device driver name is shown in the adapter information window.

       Note: The device driver name depends on the video chip that has been installed on your computer.
    6. Click **OK**.

    If the information is incorrect, reinstall the device driver. See below for more information.

    For Windows XP:

    1. Right-click on the desktop, and click **Properties** to open the Display Properties window.
    2. Click the **Settings** tab.
    3. Click **Advanced**.
    4. Click the **Adapter** tab.
    5. Make sure that the correct device driver name is shown in the adapter information window.

       Note: The device driver name depends on the video chip that has been installed on your computer.
    6. Click **OK**.

    If the information is incorrect, reinstall the device driver. See below for more information.

  - Check the monitor type and, if necessary, update the driver by doing the following:

    For Windows 7:

1. Connect the external monitor to the monitor connector, and then connect the monitor to an electrical outlet.
2. Turn on the external monitor and the computer.
3. Right-click on the desktop, and click **Screen resolution**.

   Note: If your computer cannot detect the external monitor, click the **Detect** button.
4. Click the icon for the desired monitor (the **Monitor-2** icon is for the external monitor).
5. Click **Advanced Settings**.
6. Click the **Monitor** tab. Check the monitor information window to make sure that the monitor type is correct. If it is, click **OK** to close the window; otherwise do as follows.
7. If more than one monitor type is displayed, select **Generic PnP Monitor** or **Generic Non-PnP Monitor**.
8. Click **Properties**. If you are prompted for an administrator password or confirmation, type the password or provide confirmation.
9. Click the **Driver** tab.
10. Click **Update Driver**.
11. Click **Browse my computer for driver software**, and then click **Let me pick from a list of device drivers on my computer**.
12. Clear the **Show compatible hardware** check box.
13. Select **Manufacturer** and **Model** for your monitor.
14. After updating the driver, click **Close**.
15. Set **Resolution**.

    Note: To change the color settings, select the **Monitor** tab, then set **Colors**.
16. Click **OK**.

For Windows Vista:

1. Connect the external monitor to the monitor connector, and then connect the monitor to an electrical outlet.
2. Turn on the external monitor and the computer.
3. Press Fn+F7 to change the display output location to the external monitor.

   Note: After pressing Fn+F7, you will need to wait for a moment before the image appears.
4. Right-click on the desktop, and click **Personalize**.
5. Click **Display Settings**.
6. Click the **Advanced Settings** button.
7. Click the **Monitor** tab. Check the monitor information window to make sure that the monitor type is correct. If it is, click **OK** to close the window; otherwise do as follows.
8. If more than one monitor type is displayed, select **Generic PnP Monitor** or **Generic Non-PnP Monitor**.
9. Click **Properties**. If you are prompted for an administrator password or confirmation, type the password or provide confirmation.
10. Click the **Driver** tab.
11. Click **Update Driver**.
12. Click **Browse my computer for driver software**, and then click **Let me pick from a list of device drivers on my computer**.

13. Clear the **Show compatible hardware** check box.
14. Select **Manufacturer** and **Model** for your monitor.
15. After updating the driver, click **Close**.
16. Set **Resolution** and **Colors** in the Display Settings window.
17. Click **OK**.

For Windows XP:

1. Connect the external monitor to the monitor connector, and then connect the monitor to an electrical outlet.
2. Turn on the external monitor and the computer.
3. Press Fn+F7 to change the display output location to the external monitor.

   Note: After pressing Fn+F7, you will need to wait for a moment before the image appears.
4. Right-click on the desktop, and click **Properties** to open the Display Properties window.
5. Click the **Settings** tab.
6. Click **Advanced**.
7. Click the **Monitor** tab. Check the monitor information window to make sure that the monitor type is correct. If it is, click **OK** to close the window; otherwise do as follows.
8. If more than one monitor type is displayed, select **Default Monitor**.
9. Click **Properties**.
10. Click the **Driver** tab.
11. Click **Update Driver**. The Hardware Update Wizard appears.
12. Click **No, not this time**, and then click **Next**.
13. Select **Install from a list or specific location (Advanced)**, and then click **Next**.
14. Select **Don't search. I will choose the driver to install**, and then click **Next**.
15. Clear the **Show compatible hardware** check box.
16. Select **Manufacturers** and **Models** for your monitor.
17. After updating the driver, click **OK** to close the Properties window.
18. Set **Colors** and **Screen area** in the Display Properties window.
19. Click **OK**.

- **Problem**: The screen is unreadable or distorted.

  Solution: Make sure that the monitor information is correct. (Refer to the “Solution” for setting a higher resolution on the external monitor.)

  Make sure that the appropriate monitor type is selected. (Refer to the “Solution” for setting a higher resolution on the external monitor.)

  Make sure that an appropriate refresh rate is selected by doing the following:

  For Windows 7:

  1. Connect the external monitor to the monitor connector, and then connect the monitor to an electrical outlet.
  2. Turn on the external monitor and the computer.
  3. Right-click on the desktop, and click **Screen resolution**.

     Note: If your computer cannot detect the external monitor, click the **Detect** button.
  4. Click the icon for the desired monitor (the **Monitor-2** icon is for the external monitor).

5. Click **Advanced Settings**.
6. Click the **Monitor** tab.
7. Select the correct screen refresh rate.

For Windows Vista:

1. Connect the external monitor to the monitor connector, and then connect the monitor to an electrical outlet.
2. Turn on the external monitor and the computer.
3. Press Fn+F7 to change the display output location to the external monitor.

   Note: After pressing Fn+F7, you will need to wait for a moment before the image appears.
4. Right-click on the desktop, and click **Personalize**.
5. Click **Display Settings**.
6. Click the **Advanced Settings** button.
7. Click the **Monitor** tab.
8. Select the correct screen refresh rate.

For Windows XP:

1. Connect the external monitor to the monitor connector, and then connect the monitor to an electrical outlet.
2. Turn on the external monitor and the computer.
3. Press Fn+F7 to change the display output location to the external monitor.

   Note: After pressing Fn+F7, you will need to wait for a moment before the image appears.
4. Right-click on the desktop, and click **Properties** to open the Display Properties window.
5. Click the **Settings** tab.
6. Click **Advanced**.
7. Click the **Monitor** tab.
8. Select the correct refresh rate.

- **Problem**: Wrong characters appear on the screen.

  Solution: Did you follow the correct procedure in installing the operating system or application program? If you did, have the external monitor serviced.

- **Problem**: The Extend desktop function does not work.

  Solution: Enable the Extend desktop function by doing the following:

  For Windows 7:

  1. Connect the external monitor to the monitor connector, and then connect the monitor to an electrical outlet.
  2. Turn on the external monitor and the computer.
  3. Right-click on the desktop, and click **Screen resolution**.
  4. Click the **Monitor-2** icon.
  5. Select **Extend these displays** for Multiple displays.
  6. Click the **Monitor-1** icon (for the primary display, the computer display).
  7. Select the **Resolution** of the primary display.
  8. Click the **Monitor-2** icon (for the external monitor).

9. Select the **Resolution** of the secondary display.
10. Set the relative position of the each monitor by dragging its icon. You can set the monitors in any relative position, but the icons must touch each other.
11. Click **OK** to apply the changes.

    Note: To change the color settings, right-click on the desktop, and click **Screen resolution**. Click **Advanced Settings**, select the **Monitor** tab, then set **Colors**.

For Windows Vista:

1. Attach the computer to an external monitor.
2. Right-click on the desktop, and click **Personalize**.
3. Click **Display Settings**.
4. Click the **Monitor-2** icon.
5. Select the **Extend the desktop onto this monitor** check box.
6. Click the **Monitor-1** icon (for the primary display, the computer display).
7. Select the **Resolution** and **Colors** of the primary display.
8. Click the **Monitor-2** icon (for the external monitor).
9. Select the **Resolution** and **Colors** of the secondary display.
10. Set the relative position of the each monitor by dragging its icon. You can set the monitors in any relative position, but the icons must touch each other.
11. Click **OK** to apply the changes.

For Windows XP:

1. Attach the computer to an external monitor.
2. Right-click on the desktop, and click **Properties** to open the Display Properties window.
3. Click the **Settings** tab.
4. Click the **Monitor-2** icon.
5. Select the **Extend my Windows desktop onto this monitor** check box.
6. Click the **Monitor-1** icon (for the primary display, the computer display).
7. Select the screen resolution and color quality of the primary display.
8. Click the **Monitor-2** icon (for the external monitor).
9. Select the screen resolution and color quality of the secondary display.
10. Set the relative position of the each monitor by dragging its icon. You can set the monitors in any relative position, but the icons must touch each other.
11. Click **OK** to apply the changes.

- **Problem**: Display switching does not work.

  Solution: If you use the Extend desktop function, disable it, and change the display output location. If a DVD movie or a video clip is playing, stop the playback, close the application, and then change the display output location.

- **Problem**: If you use the Extend desktop function, you cannot set a higher resolution or higher refresh rate on the secondary display.

  Solution: Change the resolution and the color depth to lower settings for the primary display by doing the following:

  For Windows 7: Change the resolution depth to lower settings for the primary display. Refer to the “Solution” for “The Extend desktop function does not work” above.

For Windows Vista: Using the Display Settings window, change the resolution and the color depth to lower settings for the primary display. To launch the Display Settings window, refer to the “Solution” for “The Extend desktop function does not work” above.

For Windows XP: Using the Display Properties window, change the resolution and the color depth to lower settings for the primary display. To launch the Display Properties window, refer to the “Solution” for “The Extend desktop function does not work” above.

- **Problem**: The screen position on the external monitor is incorrect when that monitor is set for a high resolution.

  Solution: Sometimes, when you use a high resolution such as 1600x1200, the image is shifted to left or right on the screen. To correct this, first make sure that your external monitor supports the display mode, that is, the resolution and the refresh rate, that you have set. If it does not, set a display mode that the monitor supports. If it does support the display mode you have set, go to the setup menu for the monitor itself and adjust the settings there. Usually the external monitor has buttons for access to the setup menu. For details, see the reference manual for the monitor.

Audio problems

- **Problem**: Wave or MIDI sound does not play correctly.

  Solution: Make sure the built-in audio device is configured correctly.

  For Windows 7 and Windows Vista:

  1. Click **Start** → **Control Panel**.
  2. Click **Hardware and Sound**.
  3. Click **Device Manager**. If you are prompted for an administrator password or confirmation, type the password or provide confirmation.
  4. Double-click **Sound, video and game controllers** (in Windows Vista, click the **+** mark for **Sound, video and game controllers**).
  5. Make sure the following device is enabled and configured correctly:
     - Conexant CX20672 SmartAudio HD

  For Windows XP:

  1. Click **Start** → **Control Panel**.
  2. Click **Performance and Maintenance**
  3. Click **System**.
  4. Click the **Hardware** tab, and then click the **Device Manager** button.
  5. Click the **+** mark for **Sound, video and game controllers**.
  6. Make sure the following device is enabled and configured correctly:
     - Conexant CX20672 SmartAudio HD

- **Problem**: Recordings made by using the Microphone input are not loud enough.

  Solution: Make sure that Microphone Boost is turned on and set as follows:

  For Windows 7 and Windows Vista:

  1. Click **Start** → **Control Panel**.
  2. Click **Hardware and Sound**.
  3. Click **Sound**.
  4. Click the **Recording** tab in the Sound window.
  5. Select **Microphone**, and click the **Properties** button.

6. Click the **Levels** tab, and move the **Microphone Boost** slider upwards.
7. Click **OK**.

For Windows XP:

1. Double-click the volume icon in the task bar. The Volume Control window opens.
2. Click **Options**.
3. Click **Properties**.
4. Select **Conexant HD Audio input** in the Mixer device list.
5. Click **OK**.
6. Click **Options**, and then click **Advanced Controls**.
7. Find the **Microphone volume** control, and then click **Advanced**.
8. Select the **Microphone boost** check box.
9. Click **Close**.

Note: For details about controlling volume, refer to your Windows online help.

- **Problem**: A volume or balance slider cannot be moved.

  Solution: The slider might be grayed out. This means that its position is fixed by the hardware and cannot be changed.

- **Problem**: The volume sliders do not stay in place when some audio applications are used.

  Solution: It is normal for the sliders to change position when certain sound applications are used. The applications are aware of the Volume Mixer window (in Windows XP, Volume Control window) and are allowed to change the settings themselves. An example is the Windows Media Player. Usually the application has sliders available to control the sound from within the application.

- **Problem**: The volume sliders do not all fit in the Volume Control window in Windows XP.

  Solution: Press Ctrl+S keys while the volume control is in focus, and toggle to a smaller size.

- **Problem**: The balance slider cannot completely mute one channel.

  Solution: The control is designed to compensate for minor differences in balance and does not completely mute either channel.

- **Problem**: There is no volume control for MIDI sound on the Volume Mixer window (in Windows XP, Volume Control window).

  Solution: Use the hardware volume control. In Windows XP, use the hardware volume control or the Wave volume control on the Volume Control window. This is because the Built-In Synthesizer Software does not support the control.

- **Problem**: The sound cannot be turned off completely even if you set the Master volume control at minimum.

  Solution: You can still hear some sound even though you have set the Master volume control at minimum. To turn off the sound completely, go to the Master volume control and select Mute speakers (in Windows Vista and Windows XP, Mute).

- **Problem**: Sound does not come from a headphone or a speaker, or your computer cannot record sounds when the SmartAudio is set to MULTI-STREAM mode (Windows Vista).

  Solution: To switch from one device to another (for example, from a speaker to a headphone, or from an external microphone to a built-in microphone), do as follows:

1. Click **Start** → **Control Panel** → **Hardware and Sound**.
2. Click the **SmartAudio** icon. The SmartAudio window opens.
3. Make sure that you are in MULTI-STREAM mode in the Audio Director window.
4. In the Volume Mixer window, select the device you want-for example, speakers. If your computer is attached to a ThinkPad Mini Dock Plus or a ThinkPad Mini Dock, you can also select a device from them.
5. Play any sound via a music program (for example, Windows Media Player). Make sure that sound comes from speakers now.
6. Then, if you would like to switch to a headphone, close the music program.
7. Go to the Volume Mixer window. Then select another device, which is now the headphone.
8. Play any sound via the music program. Make sure that sound comes from a headphone attached directly to the system.

For details, refer to the Help for SmartAudio.

Note: In the Volume Mixer window of SmartAudio, a check mark by the entry for a device, such as speakers for a playback device, or a built-in microphone for a recording device, shows that the device has been selected.

- **Problem**: When you connect a headphone to your computer while playing sound, a speaker does not produce sound in the MULTI-STREAM mode at SmartAudio (Windows 7).

  Solution: Once the headphone is attached, the streaming is automatically redirected to it. If you want to listen to sound from the speakers again, be sure to set those speakers as the default device. The procedure is as follows:

  1. Click **Start** → **Control Panel** → **All Control Panel Items**.
  2. Click the **SmartAudio** icon. The SmartAudio window opens.
  3. Look at the playback devices. If you have attached a headphone, the headphone will be automatically set as the default device, and the icon for that headphone will be checked.
  4. To set a different device as the default, just double-click the icon for those speakers. That icon will now have a check mark.
  5. Play any sound by use of a music program such as Windows Media Player. Make sure that sound comes from the speakers.

  For details, refer to the Help for SmartAudio.

Fingerprint reader problems

- **Problem**: The surface of the reader is dirty, stained, or wet.

  Solution: Gently clean the surface of the reader with a dry, soft, lint-free cloth.

- **Problem**: The reader often fails to enroll or authenticate your fingerprint.

  Solution: If the surface of the reader is dirty, stained, or wet, gently clean the surface of the reader with a dry, soft, lint-free cloth.

  If your finger has any of the following conditions, you may not be able to register or authenticate it:

  – Your finger is wrinkled.
  – Your finger is rough, dry, or injured.
  – Your finger is very dry.
  – Your finger is stained with dirt, mud, or oil.
  – The surface of your finger is very different from the one you used when you enrolled your fingerprint.

– Your finger is wet.
– A finger that has not been enrolled is used.

To improve the situation, try the following:

– Clean or wipe your hands to remove any excess dirt or moisture from the fingers.
– Enroll and use a different finger for authentication.
– If your hands are too dry, apply lotion to them.

Battery and power

This section tells what to do if you have a battery and power problem.

This section includes five topics: Battery, ac power adapter, Power, Power button, Startup and Sleep (standby) and hibernation. Check these topics to find the related information.

Battery problems

- **Problem**: The battery pack cannot be fully charged by the power-off method in the standard charge time for your computer.

  Solution: The battery pack might be over-discharged. Do the following:

  1. Turn off the computer.
  2. Make sure that the over-discharged battery pack is in the computer.
  3. Connect the ac power adapter to the computer and let it charge.

  If the optional Quick Charger is available, use it to charge the over-discharged battery pack.

  If the battery pack cannot be fully charged in 24 hours, use a new battery pack.

- **Problem**: Your computer shuts down before the battery status indicator shows empty, ***-or-*** Your computer operates after the battery status indicator shows empty.

  Solution: Discharge and recharge the battery pack.

- **Problem**: The operating time for a fully charged battery pack is short.

  Solution: Discharge and recharge the battery pack. If your battery's operating time is still short, use a new battery pack.

- **Problem**: The computer does not operate with a fully charged battery pack.

  Solution: The surge protector in the battery pack might be active. Turn off the computer for one minute to reset the protector; then turn on the computer again.

- **Problem**: The battery pack cannot be charged.

  Solution: You cannot charge the battery when it is too hot. If the battery feels hot, remove it from the computer and allow it to cool to room temperature. After it cools, reinstall it and recharge the battery. If it still cannot be charged, have it serviced.

AC power adapter problems

- **Problem**: The ac power adapter is connected to the computer and the working electrical outlet, but the power adapter (power plug) icon is not displayed in the task bar. Also the ac power indicator does not light up.

  Solution: Do as follows:

  1. Make sure that the connection of the ac power adapter is correct. For connecting the ac power adapter, see the Setup Instructions manual included in the shipping contents of your computer.

2. If the above step is correct, turn off the computer, then disconnect the ac power adapter and uninstall the main battery.
3. Reinstall the battery and reconnect the ac power adapter, then turn on the computer.
4. If the power adapter icon still does not appear on the task bar and the ac power indicator does not light up, have the ac power adapter and your computer serviced.

Note: If your computer is a Windows 7 model, to display the power adapter (power plug) icon, click **Show hidden icons** in the task bar.

Power problems

Print these instructions now and keep it with your computer for reference later.

If your computer is getting no power at all, check the following items:

1. Verify the power switch. Refer to “Status indicators” on page 18. The power switch is illuminated whenever the computer is on.
2. Check all power connections. Remove any power strips and surge protectors to connect the ac power adapter directly to the ac power outlet.
3. Inspect the ac power adapter. Check for any physical damage, and make sure that the power cable is firmly attached to the adapter brick and the computer.
4. Verify the ac power source is working by attaching another device to the outlet.
5. Remove the computer from a ThinkPad X220 Ultrabase, refer to “Detaching a ThinkPad X220 Ultrabase” on page 153.
6. Remove all devices and then test for system power with minimal devices attached.
   a. Disconnect the ac power adapter and all cables from the computer.
   b. Close the computer display, and turn the computer over.
   c. Remove the battery. Refer to “Replacing the battery” on page 116.
   d. Remove the memory (SO-DIMM). Refer to “Replacing memory” on page 143.
   e. Remove the PCI Express Mini Card. Refer to “Installing and replacing the PCI Express Mini Card for wireless LAN/WiMAX connection” on page 131.
   f. Remove the hard disk drive and solid state drive. Refer to “Replacing the hard disk drive” on page 125 and “Replacing the solid state drive” on page 128.
   g. Wait for 30 seconds, and then reinstall the SO-DIMM and the known good battery or the ac power adapter to test the computer with minimal devices attached first.
   h. Reinstall each device one at a time that you have removed in the earlier steps.

If your computer does not run on battery power, check the following items:

1. Remove and reset the battery to make sure that it is properly connected. Refer to “Replacing the battery” on page 116.
2. Swap batteries with another similar model, if available.

   If another similar ThinkPad model is available, then verify that the battery pack works in the other computer and that the battery pack for the other model works in this computer.
3. Verify the battery-status indicator. Refer to “Status indicators” on page 18.

   The battery-status indicator is normally illuminated whenever the battery is installed and the computer is on, or the ac power adapter is connected and the battery is charging. This indicator may be blinking or solid in either orange or green color depending on the status of the battery.

A power button problem

- **Problem**: The system does not respond, and you cannot turn off the computer.

  Solution: Turn off the computer by pressing and holding the power button for 4 seconds or more. If the system is still not reset, remove the ac power adapter and the battery.

Startup problems

Print these instructions now and keep them with your computer for reference later.

If you receive an error message before the operating system loads, check the following item:

- Follow the appropriate corrective actions for Power-on self-test error messages.

If you receive an error message while the operating system is loading the desktop configuration after the POST is completed, check the following items:

1. Visit the Lenovo Support Web site at http://www.lenovo.com/support and search for the error message.
2. Visit the Microsoft Knowledge Base homepage at http://support.microsoft.com/ and search for the error message.

Sleep (standby) and hibernation problems

- **Problem**: The computer enters sleep (standby) mode unexpectedly.

  Solution: If the processor overheats, the computer automatically enter sleep (standby) mode to allow the computer to cool and to protect the processor and other internal components. Check the settings for sleep (standby) mode, using Power Manager.

- **Problem**: The computer enters sleep (standby) mode (the sleep/standby indicator turns on) immediately after Power-on self-test.

  Solution: Make sure that:

  – The battery is charged.

  – The operating temperature is within the acceptable range. Refer to “Features” on page , “Specifications” on page 30, and “Operating environment” on page 32.

  If the battery is charged and the temperature is within range, have the computer serviced.

- **Problem**: The “critical low-battery error” message appears, and the computer immediately turns off.

  Solution: The battery power is getting low. Connect the ac power adapter to the computer and plug it into an electrical outlet, or replace the battery with a charged one.

- **Problem**: The computer display remains blank after you press Fn to return from sleep (standby) mode.

  Solution: Check whether an external monitor was disconnected or turned off while the computer was in sleep (standby) mode. If you disconnected or turned off the external monitor, connect it or turn it on before resuming the computer from the sleep (standby) mode. When resuming the computer from the sleep (standby) mode without attaching the external monitor or turning it on, and the computer display remains blank, press Fn+F7 to bring up the computer display.

  Note: If you are using Fn+F7 to apply a presentation scheme, you will need to press Fn+F7 at least three times in three seconds to bring up the computer display.

  Note: If your computer is a Windows 7 model, it does not support the presentation scheme.

- **Problem**: The computer does not return from sleep (standby) mode, or the sleep (standby) indicator stays on and the computer does not work.

Solution: If the system does not return from sleep (standby) mode, it may have entered sleep (standby) or hibernation mode automatically because the battery is depleted. Check the sleep (standby) indicator.

- If the sleep (standby) indicator is on, your computer is in sleep (standby) mode. Connect the ac power adapter to the computer; then press Fn.
- If the sleep (standby) indicator is off, your computer is in hibernation mode or power-off state. Connect the ac power adapter to the computer; then press the power button to resume operation.

If the system still does not return from sleep (standby) mode, your system may stop responding and you may not be able to turn off the computer. In this case, you need to reset the computer. If you have not saved your data, it may be lost. To reset the computer, press and hold the power button for 4 seconds or more. If the system is still not reset, remove the ac power adapter and the battery.

- **Problem**: Your computer does not enter sleep (standby) or hibernation mode.

  Solution: Check whether any option has been selected to disable your computer from entering sleep (standby) or hibernation mode.

  If your computer tries to enter sleep (standby) mode but the request is rejected, the device in the USB connector might be disabled. If this occurs, do a hot-unplug-and-plug operation for the USB device.

- **Problem**: The Fn+F12 key combination does not make the computer enter hibernation mode.

  Solution: The computer cannot enter hibernation mode:

  - If the hibernation mode is not enabled in Windows XP. To enable it, do as follows:

    For Windows XP:

    1. Click **Start** → **Control panel**.
    2. Click **Performance and Maintenance**.
    3. Click **Power Options**.
    4. Click the **Hibernate** tab.
    5. Click the **Enable hibernation** check box.
    6. Click **OK**.

  If you want to be able to enter hibernation mode by pressing Fn+F12, you need to install ThinkPad PM driver.

- **Problem**: The battery discharges slightly while the computer is in hibernation mode.

  Solution: If the wakeup function is enabled, the computer consumes small amount of power. This is not a defect. For details, refer to “Power-saving modes” on page 59.

Drives and other storage devices

This section includes three drive problems which are hard disk drive, solid state drive, and optical drive.

Hard disk drive problems

- **Problem**: The hard disk drive makes a rattling noise intermittently.

  Solution: The rattling noise might be heard:

  - When the hard disk drive begins or finishes getting access to data.
  - When you carry the hard disk drive.
  - When you carry your computer.

  This is a normal characteristic of a hard disk drive and is not a defect.

- **Problem**: The hard disk drive does not work.

Solution: In the startup menu of the ThinkPad Setup, make sure that the hard disk drive is included in the "Boot priority order" list. If it is included in the "Excluded from boot order" list, it is disabled. Select the entry for it in the list and press the Shift+1 key. This moves the entry to the "Boot priority order" list.

- **Problem**: After setting a hard disk password on the hard disk drive of the computer, you moved the drive to another computer. Now you cannot unlock the hard disk password.

  Solution: Your computer supports an enhanced password algorithm. Computers older than yours may not support such a security function.

Solid state drive problems

- **Problem**: When you compress files or folders by use of the data compression function in Windows, and then decompress them, the process of writing to or reading from the files or folders is slow.

  Solution: Apply the disk defragmentation tool in Windows for faster access to the data.

Software problems

- **Problem**: An application does not run correctly.

  Solution: Make sure that the problem is not being caused by the application.

  Check that your computer has the minimum required memory to run the application. Refer to the manuals supplied with the application.

  Check the following:

  – The application is designed to operate with your operating system.
  – Other applications run correctly on your computer.
  – The necessary device drivers are installed.
  – The application works when it is run on some other computer.

  If an error message appears while you are using the application program, refer to the manuals supplied with the application.

  If the application still does not run correctly, contact your place of purchase or a service representative for help.

Ports and connectors

This section includes the most common ports and connectors problems: Universal Serial Bus, and docking station or port replication.

Universal Serial Bus problems

- **Problem**: A device connected to the USB connector does not work.

  Solution: Open the Device Manager window. Make sure that the USB device setup is correct, and that the assignment of computer resource and the installation of the device driver are correct.

  For Windows 7 and Windows Vista:

  1. Click **Start** → **Control Panel**.
  2. Click **Hardware and Sound**.
  3. Click **Device Manager**. If you are prompted for an administrator password or confirmation, type the password or provide confirmation.

  For Windows XP:

  1. Click **Start** → **Control Panel**.
  2. Click **Performance and Maintenance**, and click **System**.

3. Click the **Hardware** tab, and click the **Device Manager** button.

Refer to “Diagnosing problems” on page 207 and run Lenovo ThinkVantage Toolbox for a diagnostic test of the USB connector.

A docking station or port replicator problem

- **Problem**: The computer does not start when you try to turn it on, and does not respond when you try to resume operation.

  Solution: Make sure that:

  – The ac power adapter is connected to the docking station or the port replicator.

  – The docking indicator of the ThinkPad Mini Dock Plus Series 3 or the ThinkPad Mini Dock Series 3 is on.

  – The computer is securely attached to the docking station or the port replicator.

Chapter 11. Getting support

There is more to owning a ThinkPad notebook than having a powerful, portable computer. This chapter offers information about when to communicate with Lenovo and how best to do it.

- “Before you contact Lenovo” on page 235
- “Getting help and service” on page 236
- “Purchasing additional services” on page 241

Before you contact Lenovo

Often, you can solve your computer problems by referring to the information in the explanations of error codes, running Lenovo ThinkVantage Toolbox or by consulting the ThinkPad Web site.

Register your computer

Register your ThinkPad products with Lenovo. Go to: http://www.lenovo.com/register. This can help authorities return your computer to you if it is lost or stolen. Registering your computer also enables Lenovo to notify you about possible technical information and upgrades.

For more information about registering your computer, refer to “Register your computer” on page 39.

Download system updates

Downloading updated software might resolve problems you experience with your computer.

To download updated software, go to http://www.lenovo.com/support/site.wss/document.do?sitestyle=lenovo&lndocid=tpad-matrix. Then follow the instructions on the screen.

Record information

Before you talk to a Lenovo representative, record the following important information about your computer.

Record problem symptoms and details

Collect the answers to the questions below before you call for help. Then, you will be able to get help as quickly as possible.

- What is the problem? Is it continuous or intermittent?
- Is there an error message that appears? What is the error code, if any?
- What operating system are you using? Which version?
- Which software applications were running at the time of the problem?
- Can the problem be reproduced? If so, how?

Record system information

The serial number label is on the bottom of your computer. Record the machine type and the serial number.

- What is the name of your Lenovo product?
- What is the machine type?
- What is the serial number?

© Copyright Lenovo 2011

Getting help and service

If you need help, service, technical assistance, or just want more information about Lenovo products, you will find a wide variety of sources available from Lenovo to assist you. This section contains information about where to go for additional information about Lenovo and our products, what to do if you experience a problem with your computer, and whom to call for service should it be necessary.

Information about your computer and preinstalled software, if any, is available in the documentation that comes with your computer. That documentation includes printed books, online books, README files, and help files. In addition, information about Lenovo products is available on the World Wide Web.

Microsoft Service Packs are the latest software source for Windows product updates. They are available via Web download (connection charges may apply) or via disc. For more specific information and links, please go to http://www.microsoft.com. Lenovo offers Up and Running technical assistance with installation of, or questions related to, Service Packs for your Lenovo-preloaded Microsoft Windows product. For information, please contact the Customer Support Center.

Using diagnostic programs

Many computer problems can be solved without outside assistance. If you experience a problem with your computer, the first place to start is the troubleshooting information of your computer documentation. If you suspect a software problem, see the documentation, including README files and online help, that comes with the operating system or application program.

ThinkPad notebooks come with a set of diagnostic programs that you can use to help you identify hardware problems. See “Diagnosing problems” on page 207 for instructions on using the diagnostic programs.

The Troubleshooting information or the diagnostic programs might tell you that you need additional or updated device drivers or other software. Lenovo maintains pages on the World Wide Web where you can get the latest technical information and download device drivers and updates.

Lenovo support Web site

Technical support information is available at:
http://www.lenovo.com/support

This portal is updated with the latest information about the following subjects:

- **Downloads & Drivers**: Download drivers, flash BIOS, and update your software
- **Warranty**: Check your warranty status and upgrade your warranty.
- **Technical Support**: Click **Need Help?** for self-help tips to help diagnose a problem.
- **ThinkVantage**: Learn more about ThinkVantage software to improve productivity and reduce cost.
- **Lenovo Forums**: Search the community knowledge base for your computer to share and discover information with other users.
- **User Guides & Manuals**: Read or print any publications related to your product.

Calling Lenovo

If you have tried to correct the problem yourself and still need help, during the warranty period, you can get help and information by telephone through the Customer Support Center. The following services are available during the warranty period:

- Problem determination - Trained personnel are available to assist you with determining if you have a hardware problem and deciding what action is necessary to fix the problem.

- Lenovo hardware repair - If the problem is determined to be caused by Lenovo hardware under warranty, trained service personnel are available to provide the applicable level of service.
- Engineering change management - Occasionally, there might be changes that are required after a product has been sold. Lenovo or your reseller, if authorized by Lenovo, will make selected Engineering Changes (ECs) available that apply to your hardware.

The following items are not covered:
- Replacement or use of parts not manufactured for or by Lenovo or nonwarranted parts

  Note: All warranted parts contain a 7-character identification in the format FRU XXXXXXX.
- Identification of software problem sources
- Configuration of system BIOS (UEFI BIOS) as part of an installation or upgrade
- Changes, modifications, or upgrades to device drivers
- Installation and maintenance of network operating systems (NOS)
- Installation and maintenance of application programs

For the terms and conditions of the Lenovo Limited Warranty that applies to your Lenovo hardware product, see “Warranty Information” in the *Safety and Warranty Guide* that comes with your computer.

If possible, be near your computer when you make your call in case the technical assistance representative needs to help you resolve a computer problem. Please ensure that you have downloaded the most current drivers and system updates, run diagnostics, and recorded information before you call. When calling for technical assistance, please have the following information available:
- Machine Type and Model
- Serial numbers of your computer, monitor, and other components, or your proof of purchase
- Description of the problem
- Exact wording of any error messages
- Hardware and software configuration information for your system

Telephone numbers

Note: Telephone numbers are subject to change without notice. For the latest list of Customer Support Center telephone numbers and hours of operation, go to the Support Web site at:
http://www.lenovo.com/support/phone

Table 10. World-wide telephone list

Country or Region	Telephone Number
Africa	Africa: +44 (0)1475-555-055 South Africa: +27-11-3028888, 0800110756 and +27-11- 3027252 Central Africa: Contact the nearest Lenovo Business Partner
Argentina	0800-666-0011 (Spanish)
Australia	131-426 (English)
Austria	0043-0810-100654 (Warranty service and support) (German)
Belgium	02-225-3611 (Warranty service and support) (Dutch and French)
Bolivia	0800-10-0189 (Spanish)
Brazil	Sao Paulo region: (11) 3889-8986 Outside Sao Paulo region: 0800-701-4815 (Brazilian Portuguese)

Table 10. World-wide telephone list (continued)

Country or Region	Telephone Number
Brunei	801-1041 (English and Bahasa Melayu)
Canada	1-800-565-3344 (English and French)
Caribbean (Bermuda, Jamaica, and Tortola)	1-877-426-7378 (English)
Chile	800-361-213 188-800-442-488 (Toll free) (Spanish)
China	Technical Support Line 800-990-8888 86-10-58851110 (Mandarin)
China (Hong Kong S.A.R.)	ThinkPad (Technical enquiry hotline): 2516-3939 (Hong Kong) ThinkPad Service Center: 3140-2788 (Hong Kong) (Cantonese, English, and Mandarin)
China (Macau S.A.R.)	ThinkPad (Technical enquiry hotline): 0800-839 (Macau) ThinkPad Service Center: 2871-5399 (Macau) (Cantonese, English, and Mandarin)
Colombia	1-800-912-3021 (Spanish)
Costa Rica	0-800-011-1029 (Spanish)
Croatia	0800-0426
Cyprus	+357-22-841100
Czech Republic	+420-2-7213-1316
Denmark	7010-5150 (Warranty service and support) (Danish)
Dominican Republic	1-866-434-2080 (Spanish)
Ecuador	1-800-426911 (Spanish)
Egypt	+202-35362525
El Salvador	800-6264 (Spanish)
Estonia	+372 66 00 800 +372 6776793
Finland	+358-800-1-4260 (Warranty service and support) (Finnish)
France	Hardware 0810-631-213 (Warranty service and support) Software 0810-631-020 (Warranty service and support) (French)
Germany	0180 5 - 00 46 18 (German)
Greece	+30-210-680-1700
Guatemala	1800-624-0051 (Spanish)

Table 10. World-wide telephone list (continued)

Country or Region	Telephone Number
Honduras	Tegucigalpa: 232-4222 San Pedro Sula: 552-2234 (Spanish)
Hungary	+ 36 1 3825716 + 36 1 3825720 (English and Hungarian)
India	1800-425-2666 or +91-80-2535-9182 (English)
Indonesia	021 5238 823 001-803-606-282 (Local number only) +603 8315 6859 (DID) (English and Bahasa Indonesian)
Ireland	01-881-1444 (Warranty service and support) (English)
Israel	Givat Shmuel Service Center: +972-3-531-3900 (Hebrew and English)
Italy	+39-800-820094 (Warranty service and support) (Italian)
Japan	ThinkPad Products Toll Free: 0120-20-5550 International: +81-46-266-4716 (Japanese and English) The above numbers will be answered with a Japanese language voice prompt. For telephone support in English, please wait for the Japanese voice prompt to end, and an operator will answer. Please say “English support please,” and your call will be transferred to an English speaking operator.
Korea	1588-6782 (Korean)
Latvia	+371 7070360
Lithuania	+370 5 278 66 00
Luxembourg	+352-360-385-343 (French)
Malaysia	1800-88-1889 (Local number only) +603 8315 6855 (DID) (English and Bahasa Melayu)
Malta	+35621445566
Mexico	001-866-434-2080 (Spanish)
Middle East	+44 (0)1475-555-055
Netherlands	+31-20-514-5770 (Dutch)
New Zealand	0800-733-222 (English)
Nicaragua	001-800-220-1830 (Spanish)
Norway	8152-1550 (Warranty service and support) (Norwegian)

Table 10. World-wide telephone list (continued)

Country or Region	Telephone Number
Panama	206-6047 001-866-434-2080 (Lenovo Customer Support Center- toll free) (Spanish)
Peru	0-800-50-866 (Spanish)
Philippines	1800-1601-0033 (Local number only) +603 8315 6858 (DID) (English and Filipino)
Poland	+48 22 760-73-00 (Polski)
Portugal	+351 21 892 7046 (Portuguese)
Romania	+4-021-224-4015
RUCIS (Russia and CIS)	For Russia: 8 800 100 7888 (Toll free number) For CIS Countries: 0040 31 620 5099 (Payable) (Russian and English)
Singapore	800 6011 343 (Local number only) +603 8315 6856 (DID) (English)
Slovakia	+421-2-4954-5555
Slovenia	+386-1-200-50-60 (Slovenian)
Spain	91-714-7983 0901-100-000 (Spanish)
Sri Lanka	+9411 2493547 +9411 2493548 (English)
Sweden	077-117-1040 (Warranty service and support) (Swedish)
Switzerland	0800-55-54-54 (Warranty service and support) (German, French, and Italian)
Taiwan	886-2-82273299 or 0800-000-702 (Mandarin)
Thailand	1-800-060-066 (Local number only) 66 2273 4088 +603 8315 6857 (DID) (Thai and English)
Turkey	00800-4463-2041 (Turkish)
United Kingdom	08705-500-900 (Standard warranty support) (English)
United States	1-800-426-7378 (English)
Uruguay	000-411-005-6649 (Spanish)

Table 10. World-wide telephone list (continued)

Country or Region	Telephone Number
Venezuela	0-800-100-2011 (Spanish)
Vietnam	For Northern Area and Hanoi City: 844 3 946 2000 or 844 3 942 6457 For Southern Area and Ho Chi Minh City: 848 3 829 5160 or 844 3 942 6457 (Vietnamese and English)

In all other countries and regions, contact your Lenovo reseller or marketing representative, or go to the Lenovo support Web site at:
http://www.lenovo.com/support

Purchasing additional services

During and after the warranty period, you can purchase additional services, such as support for Lenovo and non-Lenovo hardware, operating systems, and application programs; network setup and configuration; upgraded or extended hardware repair services; and custom installations. Service availability and service name might vary by country.

For more information about these services, go to:
http://www.lenovo.com/accessories/services/index.html

Appendix A. Regulatory information

Wireless related information

Wireless interoperability

Wireless LAN PCI Express Mini Card is designed to be interoperable with any wireless LAN product that is based on Direct Sequence Spread Spectrum (DSSS), Complementary Code Keying (CCK), and/or Orthogonal Frequency Division Multiplexing (OFDM) radio technology, and is compliant to:

- The 802.11b/g Standard, 802.11a/b/g or 802.11n draft 2.0 on Wireless LANs, as defined and approved by the Institute of Electrical and Electronics Engineers.
- The Wireless Fidelity (WiFi) certification as defined by the Wi-Fi Alliance.

Bluetooth device is designed to be interoperable with any *Bluetooth* product that is compliant to *Bluetooth* Specification 2.1+EDR as defined by the *Bluetooth* SIG. Following profiles are supported by *Bluetooth* device:

- Generic Access
- Service Discovery
- Serial Port
- Dial-up Networking
- FAX
- LAN Access using PPP
- Personal Area Network
- Generic Object Exchange
- Generic Object Push
- File Transfer
- Synchronization
- Audio Gateway
- Headset
- Printer
- Human Interface Devices (Keyboard/Mouse)
- Basic Image
- Handsfree
- AV
- Phone Book Access Profile (PBAP) (Windows 7 and Windows Vista only)
- VDP-Sync Profile (Windows 7 and Windows Vista only)

Usage environment and your health

Integrated wireless cards emit radio frequency electromagnetic energy like other radio devices. However, the level of energy emitted is far much less than the electromagnetic energy emitted by wireless devices like for example mobile phones.

© Copyright Lenovo 2011

Due to the fact that integrated wireless cards operate within the guidelines found in radio frequency safety standards and recommendations, Lenovo believes they are safe for use by consumers. These standards and recommendations reflect the consensus of the scientific community and result from deliberations of panels and committees of scientists who continually review and interpret the extensive research literature.

In some situation or environment, the use of integrated wireless cards may be restricted by the proprietor of the building or responsible representatives of the organization. These situations and areas may for example include:

- Using the integrated wireless cards on board of airplanes, in hospitals or near petrol stations, blasting areas (with electro-explosive devices), medical implants or body-worn electronic medical devices, e.g. pace makers.
- In any other environment where the risk of interference to other devices or services is perceived or identified as harmful.

If you are uncertain of the policy that applies on the use of wireless devices in a specific organization (e.g., airport or hospital), you are encouraged to ask for authorization to use integrated wireless cards prior to turning on the computer.

Location of the UltraConnect™ wireless antennas

ThinkPad models feature an integrated diversity antenna system built into the display for optimal reception, enabling wireless communication wherever you are.

ThinkPad X220 and X220i

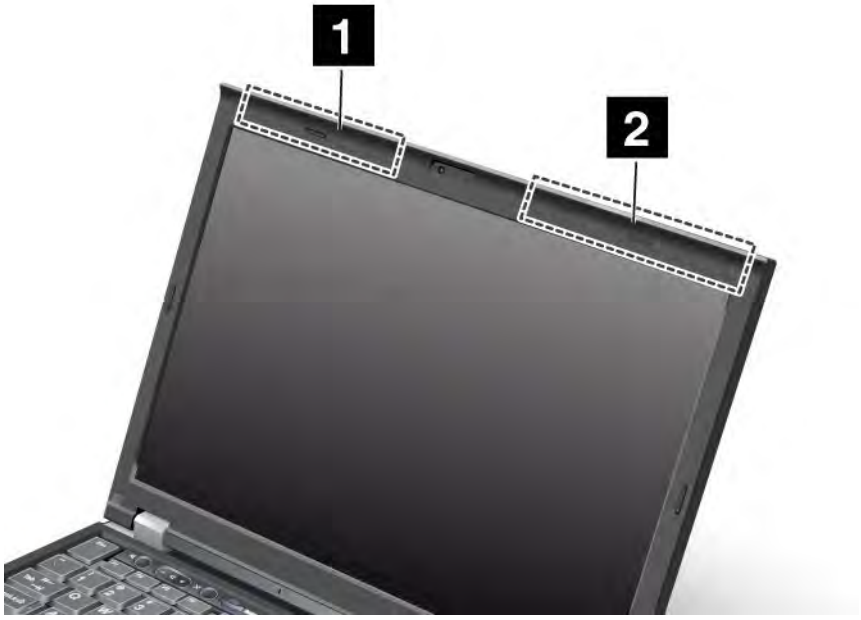

1. **Wireless LAN and WiMAX combo antenna (Auxiliary)**

   The auxiliary antenna connected to the wireless LAN or WiMAX feature is located on the upper left side of the computer display, near the center.

2. **Wireless LAN (third), Wireless LAN/WiMAX (main), and Wireless WAN (main)**

   The main antenna connected to the wireless LAN or WiMAX feature is located on the upper right side of the computer display, near the center. If your computer has the Multiple Input Multiple Output (MIMO) wireless LAN feature, the third wireless antenna is also located here.

ThinkPad 220 Tablet and X220i Tablet

1. **Wireless WAN (Auxiliary)**

   If your computer comes with a wireless WAN feature, its auxiliary antenna is located at the top left side of the computer display.
2. **Wireless LAN and WiMAX combo antenna (Auxiliary)**

   The auxiliary antenna connected to the wireless LAN or WiMAX feature is located at the top left portion of the computer display, near the center.
3. **Wireless LAN antenna (Third)**

   If your computer has the Multiple Input Multiple Output (MIMO) wireless LAN feature, the third wireless antenna is located at the top center portion of the computer display.
4. **Wireless LAN and WiMAX combo antenna (Main)**

   The main antenna connected to the wireless LAN or WiMAX feature is located at the top right side of the computer display, near the center.
5. **Wireless WAN antenna (Main)**

   If your computer comes with a wireless WAN feature, its main antenna is located at the top right side of the computer display.

Locating wireless regulatory notices

For more information about the wireless regulatory notices, refer to the *Regulatory Notice* shipped with your computer.

If your computer is shipped without the *Regulatory Notice*, you can find it on the Web site at:
http://www.lenovo.com/support

To view the *Regulatory Notice* on the Web site, do the following:

1. Go to:
   http://www.lenovo.com/support
2. Click the **Support & downloads** section, a new page is displayed.
3. In the right pane, type your computer number in the **Enter a product number** filed, and click **Go**.

4. You can then find the *Regulatory Notice* in the displayed search results.

Export classification notice

This product is subject to the United States Export Administration Regulations (EAR) and has an Export Classification Control Number (ECCN) of 4A994.b. It can be re-exported except to any of the embargoed countries in the EAR E1 country list.

Electronic emission notices

The following information refers to ThinkPad 4294, 4296, 4297, 4298, 4299, 4300, 4301, 4286, 4287, 4289, 4290, 4291, 4292, and 4293.

Federal Communications Commission Declaration of Conformity

This equipment has been tested and found to comply with the limits for a Class B digital device, pursuant to Part 15 of the FCC Rules. These limits are designed to provide reasonable protection against harmful interference in a residential installation. This equipment generates, uses, and can radiate radio frequency energy and, if not installed and used in accordance with the instructions, may cause harmful interference to radio communications. However, there is no guarantee that interference will not occur in a particular installation. If this equipment does cause harmful interference to radio or television reception, which can be determined by turning the equipment off and on, the user is encouraged to try to correct the interference by one or more of the following measures:

- Reorient or relocate the receiving antenna.
- Increase the separation between the equipment and receiver.
- Connect the equipment into an outlet on a circuit different from that to which the receiver is connected.
- Consult an authorized dealer or service representative for help.

Lenovo is not responsible for any radio or television interference caused by using other than specified or recommended cables and connectors or by unauthorized changes or modifications to this equipment. Unauthorized changes or modifications could void the user's authority to operate the equipment.

This device complies with Part 15 of the FCC Rules. Operation is subject to the following two conditions: (1) this device may not cause harmful interference, and (2) this device must accept any interference received, including interference that may cause undesired operation.

Responsible Party:
Lenovo (United States) Incorporated
1009 Think Place - Building One
Morrisville, NC 27560
Phone Number: 919-294-5900

Industry Canada Class B emission compliance statement

This Class B digital apparatus complies with Canadian ICES-003.

Cet appareil numérique de la classe B est conforme à la norme NMB-003 du Canada.

European Union - Compliance to the Electromagnetic Compatibility Directive

This product is in conformity with the protection requirements of EU Council Directive 2004/108/EC on the approximation of the laws of the Member States relating to electromagnetic compatibility. Lenovo cannot accept responsibility for any failure to satisfy the protection requirements resulting from a non-recommended modification of the product, including the installation of option cards from other manufacturers.

This product has been tested and found to comply with the limits for Class B Information Technology Equipment according to European Standard EN 55022. The limits for Class B equipment were derived for typical residential environments to provide reasonable protection against interference with licensed communication devices.

CE

German Class B compliance statement

Deutschsprachiger EU Hinweis:

Hinweis für Geräte der Klasse B EU-Richtlinie zur Elektromagnetischen Verträglichkeit
Dieses Produkt entspricht den Schutzanforderungen der EU-Richtlinie 2004/108/EG (früher 89/336/EWG) zur Angleichung der Rechtsvorschriften über die elektromagnetische Verträglichkeit in den EU-Mitgliedsstaaten und hält die Grenzwerte der EN 55022 Klasse B ein.

Um dieses sicherzustellen, sind die Geräte wie in den Handbüchern beschrieben zu installieren und zu betreiben. Des Weiteren dürfen auch nur von der Lenovo empfohlene Kabel angeschlossen werden. Lenovo übernimmt keine Verantwortung für die Einhaltung der Schutzanforderungen, wenn das Produkt ohne Zustimmung der Lenovo verändert bzw. wenn Erweiterungskomponenten von Fremdherstellern ohne Empfehlung der Lenovo gesteckt/eingebaut werden.

Deutschland:

Einhaltung des Gesetzes über die elektromagnetische Verträglichkeit von Betriebsmitteln
Dieses Produkt entspricht dem „Gesetz über die elektromagnetische Verträglichkeit von Betriebsmitteln“ EMVG (früher „Gesetz über die elektromagnetische Verträglichkeit von Geräten“). Dies ist die Umsetzung der EU-Richtlinie 2004/108/EG (früher 89/336/EWG) in der Bundesrepublik Deutschland.

Zulassungsbescheinigung laut dem Deutschen Gesetz über die elektromagnetische Verträglichkeit von Betriebsmitteln, EMVG vom 20. Juli 2007 (früher Gesetz über die elektromagnetische Verträglichkeit von Geräten), bzw. der EMV EG Richtlinie 2004/108/EC (früher 89/336/EWG), für Geräte der Klasse B.

Dieses Gerät ist berechtigt, in Übereinstimmung mit dem Deutschen EMVG das EG-Konformitätszeichen - CE - zu führen. Verantwortlich für die Konformitätserklärung nach Paragraf 5 des EMVG ist die Lenovo (Deutschland) GmbH, Gropiusplatz 10, D-70563 Stuttgart.

Informationen in Hinsicht EMVG Paragraf 4 Abs. (1) 4:
Das Gerät erfüllt die Schutzanforderungen nach EN 55024 und EN 55022 Klasse B.

Korea Class B compliance statement

사용자 안내문(B급 기기) - 가정용 방송통신기기 -
이 기기는 가정용(B급)으로 전자파적합등록을 한 기기로서 주로 가정에서 사용하는 것을 목적으로 하며, 모든 지역에서 사용할 수 있습니다.

Japan VCCI Class B compliance statement

この装置は， クラスB情報技術装置です。 この装置は, 家庭環境で使用することを目的としていますが， この装置がラジオやテレビジョン受信機に近接して使用されると， 受信障害を引き起こすことがあります。
取扱説明書に従って正しい取り扱いをして下さい。 VCCI-B

Japan compliance statement for products which connect to the power mains with rated current less than or equal to 20 A per phase

日本の定格電流が 20A/相 以下の機器に対する高調波電流規制
高調波電流規格 JIS C 61000-3-2 適合品

Lenovo product service information for Taiwan

台灣 Lenovo 產品服務資訊如下：
荷蘭商聯想股份有限公司台灣分公司
台北市信義區信義路五段七號十九樓之一
服務電話：0800-000-702

Pointer to the printed pub for additional regulatory information

For additional regulatory information, refer to the *Regulatory Notice* shipped with your computer.

If your computer is shipped without the *Regulatory Notice*, you can find it at the Web site http://www.lenovo.com/support. For details, refer to the instructions on “Locating wireless regulatory notices” on page 245.

Appendix B. WEEE and recycling statements

Lenovo encourages owners of information technology equipment to responsibly recycle their equipment when it is no longer needed. Lenovo offers a variety of programs and services to assist equipment owners in recycling their IT products. Information on product recycling offerings can be found on Lenovo's Internet site at: http://www.pc.ibm.com/ww/lenovo/about/environment/.

EU WEEE statements

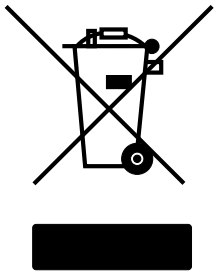

EU Only

The Waste Electrical and Electronic Equipment (WEEE) mark applies only to countries within the European Union (EU) and Norway. Appliances are labeled in accordance with European Directive 2002/96/EC concerning waste electrical and electronic equipment (WEEE). The Directive determines the framework for the return and recycling of used appliances as applicable throughout the European Union. This label is applied to various products to indicate that the product is not to be thrown away, but rather reclaimed upon end of life per this Directive.

Users of electrical and electronic equipment (EEE) with the WEEE marking per Annex IV of the WEEE Directive must not dispose of end of life EEE as unsorted municipal waste, but use the collection framework available to them for the return, recycle, recovery of WEEE and minimize any potential effects of EEE on the environment and human health due to the presence of hazardous substances. For additional WEEE information go to: http://www.lenovo.com/lenovo/environment.

Japan recycling statements

Collecting and recycling a disused Lenovo computer or monitor

If you are a company employee and need to dispose of a Lenovo computer or monitor that is the property of the company, you must do so in accordance with the Law for Promotion of Effective Utilization of Resources. Computers and monitors are categorized as industrial waste and should be properly disposed of by an industrial waste disposal contractor certified by a local government. In accordance with the Law for Promotion of Effective Utilization of Resources, Lenovo Japan provides, through its PC Collecting and Recycling Services, for the collecting, reuse, and recycling of disused computers and monitors. For details, visit the Lenovo Web site at: www.ibm.com/jp/pc/service/recycle/pcrecycle/.

Pursuant to the Law for Promotion of Effective Utilization of Resources, the collecting and recycling of home-used computers and monitors by the manufacturer was begun on October 1, 2003. This service is provided free of charge for home-used computers sold after October 1, 2003. For details, visit the Lenovo Web site at: www.ibm.com/jp/pc/service/recycle/personal/.

© Copyright Lenovo 2011

Disposing of a Lenovo computer components

Some Lenovo computer products sold in Japan may have components that contain heavy metals or other environmental sensitive substances. To properly dispose of disused components, such as a printed circuit board or drive, use the methods described above for collecting and recycling a disused computer or monitor.

Disposing of disused lithium batteries from Lenovo computers

A button-shaped lithium battery is installed on the system board of your Lenovo computer to provide power to the computer clock while the computer is off or disconnected from the main power source. If you want to replace it with a new one, contact your place of purchase or ask for a repair service provided by Lenovo. If you have replaced it by yourself and want to dispose of the disused lithium battery, insulate it with vinyl tape, contact your place of purchase, and follow their instructions. If you use a Lenovo computer at home and need to dispose of a lithium battery, you must comply with local ordinances and regulations.

Disposing a disused battery pack from Lenovo notebook computers

Your Lenovo notebook computer has a lithium ion battery pack or a nickel metal hydride battery pack. If you are a company employee who uses a Lenovo notebook computer and need to dispose of a battery pack, contact the proper person in Lenovo sales, service, or marketing, and follow that person's instructions. You also can refer to the instructions at: www.ibm.com/jp/pc/environment/recycle/battery/. If you use a Lenovo notebook computer at home and need to dispose of a battery pack, you must comply with local ordinances and regulations. You also can refer to the instructions at: www.ibm.com/jp/pc/environment/recycle/battery/.

Appendix C. Notices

Lenovo may not offer the products, services, or features discussed in this document in all countries. Consult your local Lenovo representative for information on the products and services currently available in your area. Any reference to a Lenovo product, program, or service is not intended to state or imply that only that Lenovo product, program, or service may be used. Any functionally equivalent product, program, or service that does not infringe any Lenovo intellectual property right may be used instead. However, it is the user's responsibility to evaluate and verify the operation of any other product, program, or service.

Lenovo may have patents or pending patent applications covering subject matter described in this document. The furnishing of this document does not give you any license to these patents. You can send license inquiries, in writing, to:

Lenovo (United States), Inc.
1009 Think Place - Building One
Morrisville, NC 27560
U.S.A.
Attention: Lenovo Director of Licensing

LENOVO PROVIDES THIS PUBLICATION “AS IS” WITHOUT WARRANTY OF ANY KIND, EITHER EXPRESS OR IMPLIED, INCLUDING, BUT NOT LIMITED TO, THE IMPLIED WARRANTIES OF NON-INFRINGEMENT, MERCHANTABILITY OR FITNESS FOR A PARTICULAR PURPOSE. Some jurisdictions do not allow disclaimer of express or implied warranties in certain transactions, therefore, this statement may not apply to you.

This information could include technical inaccuracies or typographical errors. Changes are periodically made to the information herein; these changes will be incorporated in new editions of the publication. Lenovo may make improvements and/or changes in the product(s) and/or the program(s) described in this publication at any time without notice.

The products described in this document are not intended for use in implantation or other life support applications where malfunction may result in injury or death to persons. The information contained in this document does not affect or change Lenovo product specifications or warranties. Nothing in this document shall operate as an express or implied license or indemnity under the intellectual property rights of Lenovo or third parties. All information contained in this document was obtained in specific environments and is presented as an illustration. The result obtained in other operating environments may vary.

Lenovo may use or distribute any of the information you supply in any way it believes appropriate without incurring any obligation to you.

Any references in this publication to non-Lenovo Web sites are provided for convenience only and do not in any manner serve as an endorsement of those Web sites. The materials at those Web sites are not part of the materials for this Lenovo product, and use of those Web sites is at your own risk.

Any performance data contained herein was determined in a controlled environment. Therefore, the result obtained in other operating environments may vary significantly. Some measurements may have been made on development-level systems and there is no guarantee that these measurements will be the same on generally available systems. Furthermore, some measurements may have been estimated through extrapolation. Actual results may vary. Users of this document should verify the applicable data for their specific environment.

© Copyright Lenovo 2011

Trademarks

The following terms are trademarks of Lenovo in the United States, other countries, or both:

Lenovo
Access Connections
Active Protection System
Rescue and Recovery
ThinkLight
ThinkPad
ThinkVantage
TrackPoint
Ultrabay
Ultrabase
UltraConnect
UltraNav

Wake on Lan is a trademark of the International Business Machines Corporation in the United States, other countries, or both.

Intel and Intel SpeedStep are trademarks or registered trademarks of Intel Corporation or its subsidiaries in the United States and other countries.

Microsoft, Windows, Windows Vista, Bing, and BitLocker are trademarks of the Microsoft group of companies.

BlackBerry®, RIM®, Research In Motion®, SureType® and related trademarks, names and logos are the property of Research In Motion Limited and are registered and/or used in the U.S. and countries around the world. Used under license from Research In Motion Limited.

Other company, product, and service names may be trademarks or service marks of others.

ThinkPad®

Part Number:

Printed in China

(1P) P/N: