标记	处数	更改文号	签名	日期

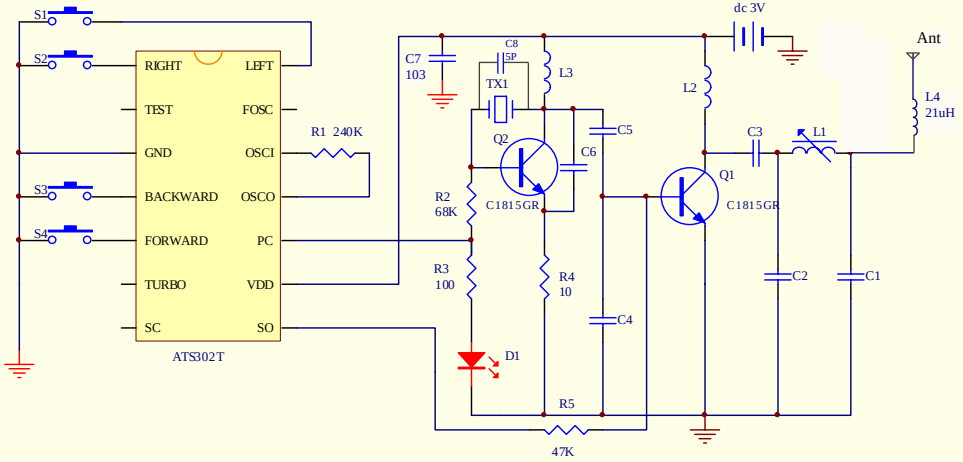

TX1	C6	C5	C4	C3	C2	C1	R3	R2	L3	L2	L1	D1
27.145MHZ	47P	68P	330P	100P	100P	10P	100	68K	2.2UH	2.2UH	27T	RED 3mm

AULDEY	COMPANY: AULDEY TOY INDUSTRY LTD.		
	MODEL NO: LC297010		
	MODEL NAME: Mitsubishi carTx		
DEZIGN: chaohui Wu	TITLE: LC297010 Circuitry elements		
CHECKED:	DRAWING NO:		REV: A0
APPROVED:	CODE:	SIZE:	SHEET: