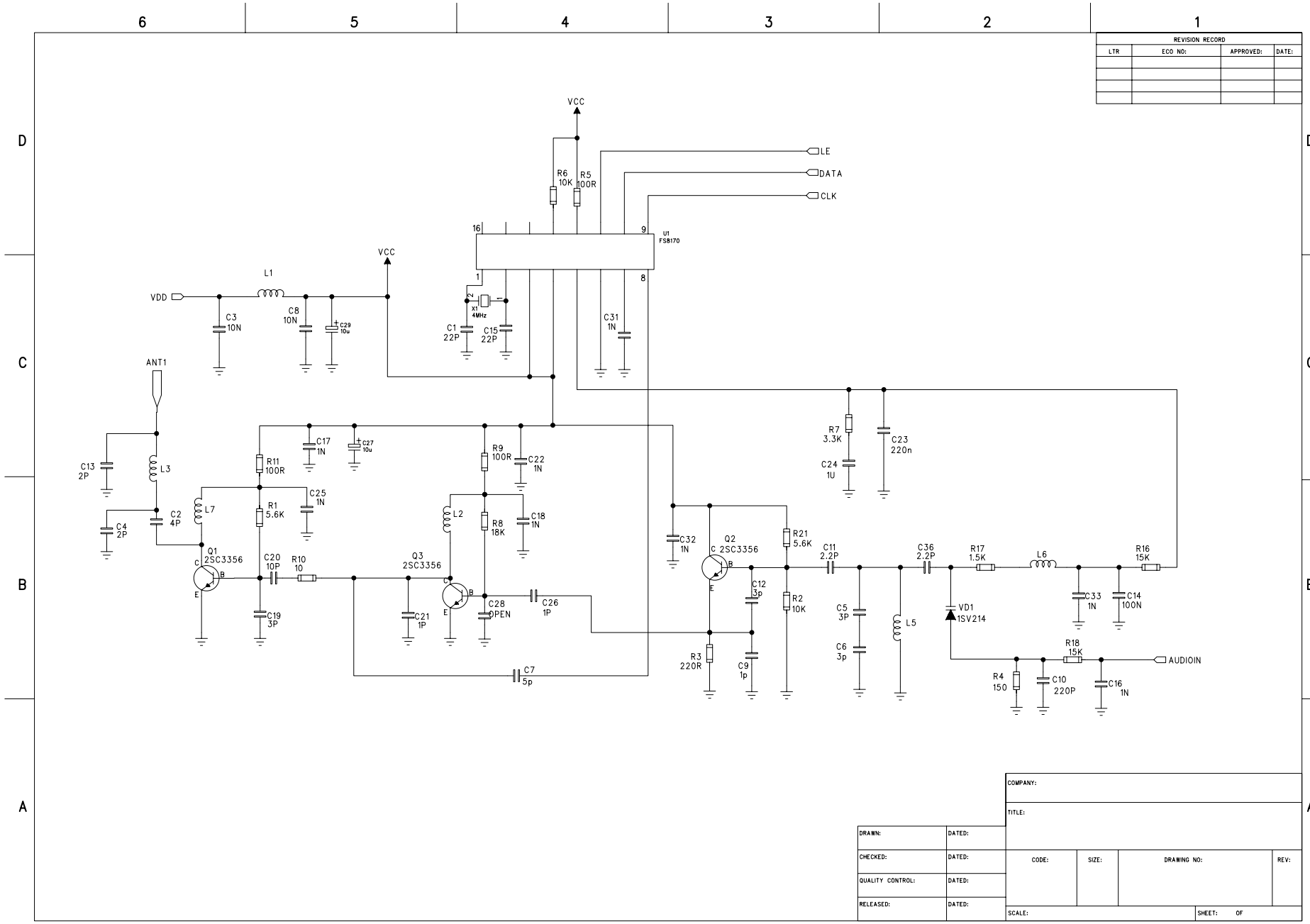

REVISION RECORD			
LTR	ECO NO:	APPROVED:	DATE:

DRAWN:	DATED:	COMPANY:			
		TITLE:			
CHECKED:	DATED:	CODE:	SIZE:	DRAWING NO:	REV:
QUALITY CONTROL:	DATED:				
RELEASED:	DATED:	SCALE:		SHEET: OF	