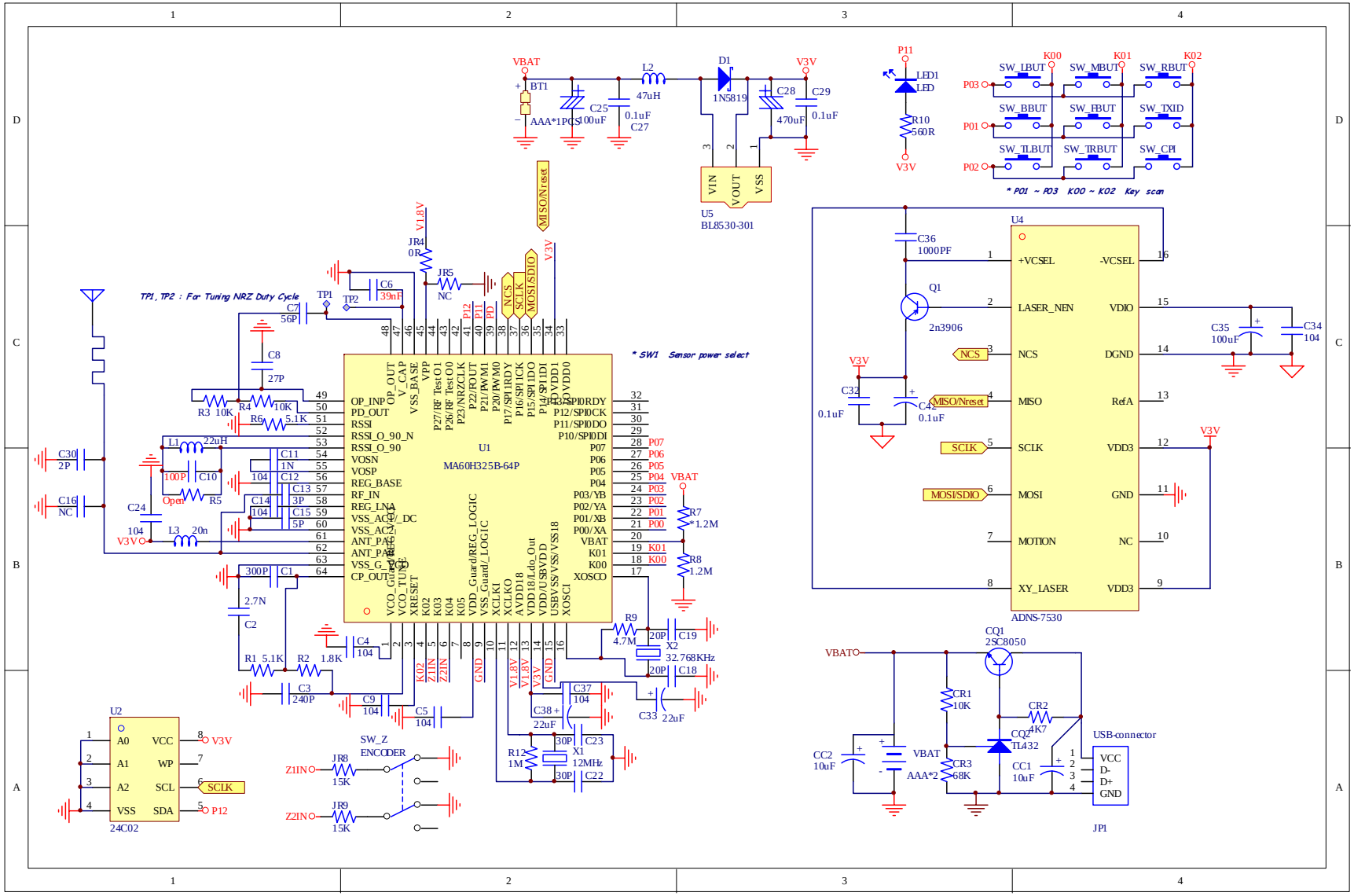
VBAT
BT1
AAA*1PCS
C25
100uF
0.1uF
C27
L2
47uH
D1
1N5819
V3V
C28
470uF
C29
0.1uF
U5
BL8530-301
VIN
VOUT
VSS
P11
LED1
LED
R10
560R
SW_LBUT
SW_MBUT
SW_RBUT
SW_BBUT
SW_FBUT
SW_TXID
SW_TLBUT
SW_TRBUT
SW_CPI
K00
K01
K02
P03
P01
P02
* P01 ~ P03 K00 ~ K02 Key scan
MISO/Nreset
V1.8V
JR4
0R
JR5
NC
C6
39nF
TP1, TP2 : For Tuning NRZ Duty Cycle
TP1
TP2
C7
56P
C8
27P
NCS
SCLK
MOSI/SDIO
* SW1 Sensor power select
U1
MA60H325B-64P
OP_INP
PD_OUT
RSSI
RSSI_O_90_N
RSSI_O_90
VOSN
VOSP
REG_BASE
RF_IN
REG_LNA
VSS_ACP/_DC
VSS_AC2
ANT_PA1
ANT_PA2
VSS_G_PA
CP_OUT
OP_OUT
V_CAP
VSS_BASE
VPP
P27/RF Test O1
P26/RF Test O0
P23/NRZCLK
P22/FOUT
P21/PWM1
P20/PWM0
P17/SPI1RDY
P16/SPI1CK
P15/SPI1DO
P14/SPI1DI
P13/SPI1VDD1
P12/SPI0RDY
P11/SPI0CK
P10/SPI0DO
P10/SPI0DI
P07
P06
P05
P04
P03/YB
P02/YA
P01/XB
P00/XA
VBAT
K01
K00
XOSCO
VCO_GUARD
VCO_TUNE
XRESET
K02
K03
K04
K05
VDD_Guard/REG_LOGIC
VSS_Guard/_LOGIC
XCLKI
XCLKO
AVDD18
VDD18/Ldo_Out
VDD/USB3VDD
USBVSS/VSS/VSS18
XOSCI
P07
P06
P05
P04
P03
P02
P01
P00
K01
K00
Z1IN
Z2IN
GND
V1.8V
V3V
GND
C30
2P
C16
NC
C24
104
V3V
L3
20n
L1
22uH
100P
C10
Open
R5
C11
1N
C12
104
C13
3P
C14
104
C15
5P
R3
10K
R4
10K
R6
5.1K
300P
C1
2.7N
C2
R1
5.1K
R2
1.8K
C3
240P
C4
104
C9
104
C5
104
R7
*1.2M
R8
1.2M
R9
4.7M
20P
C19
X2
32.768KHz
20P
C18
C33
22uF
C37
104
C38
22uF
R12
1M
30P
C23
X1
12MHz
30P
C22
U2
A0
A1
A2
VSS
VCC
WP
SCL
SDA
24C02
V3V
SCLK
P12
SW_Z
ENCODER
JR8
15K
JR9
15K
U4
+VCSEL
LASER_NEN
NCS
MISO
SCLK
MOSI
MOTION
XY_LASER
-VCSEL
VDIO
DGND
RefA
VDD3
GND
NC
VDD3
ADNS-7530
C36
1000PF
Q1
2n3906
C32
0.1uF
C42
0.1uF
C35
100uF
C34
104
CQ1
2SC8050
CR1
10K
CR2
4K7
CQ2
TL432
CR3
68K
CC1
10uF
CC2
10uF
AAA*2
USB-connector
VCC
D-
D+
GND
JP1