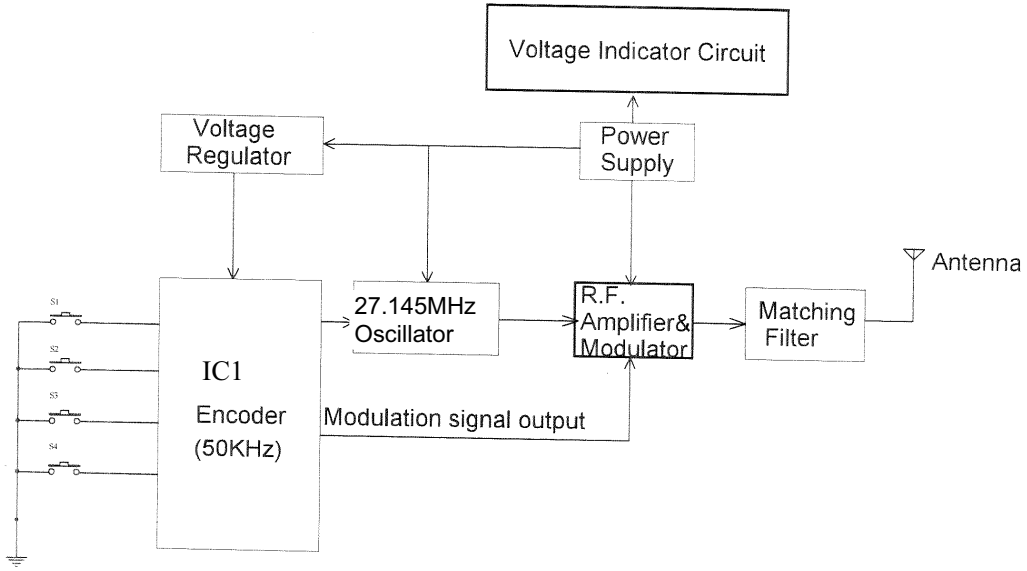

Title	Transmitter Block Diagram	
Size B	Number 1-6	Revision
Date: 30-Jun-2008		Sheet of
File		