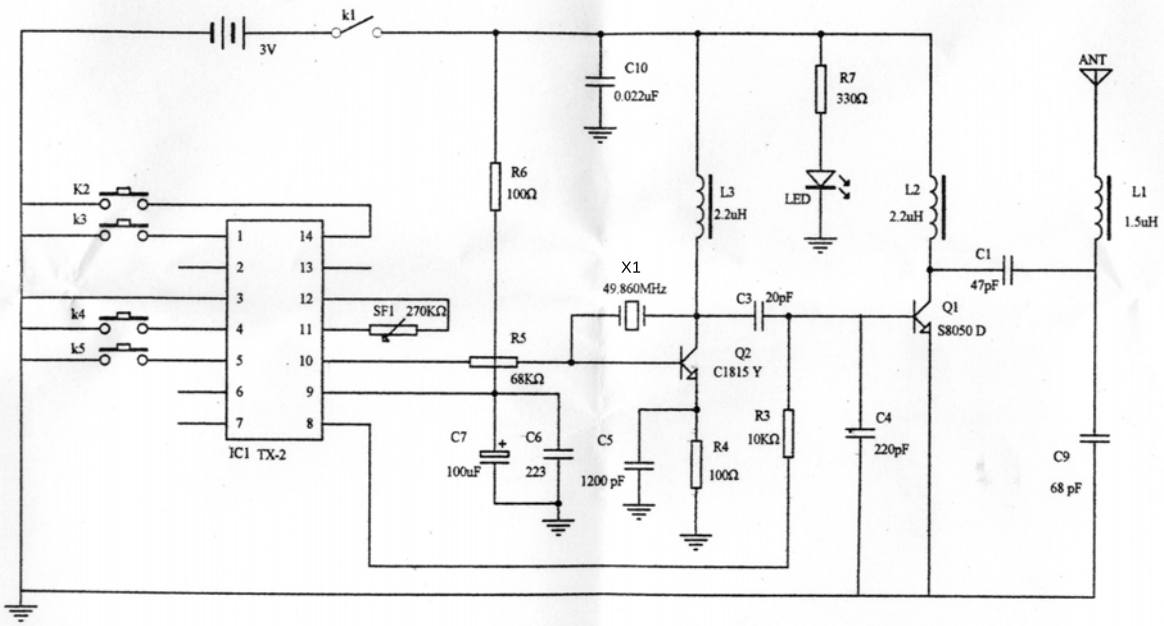

49.860MHz Transmitter

MEIJIAXIN TOYS CO., LTD.					
Drawn by	Li Zong	Reviewed by		Date	年 月 日

Title	1:10 BMW Z4 Coupe M 8209		
Size A4	Number 01		Revision 8209
Date: 16-Jan-2008		Sheet of	JX-97
File: D:\备份\MyDesign.1\JX-97 49M FCC.DDB		Drawn By:	李利宗