WISMO Quik Q2400 series

Q2406 and Q2426
Product Specification

Reference: WM_PRJ_Q2400_PTS_002
Revision: 003
Date: 14th April 2003

This document is the sole and exclusive property of WAVECOM. Not to be distributed or divulged without prior written agreement.
Ce document est la propriété exclusive de WAVECOM. Il ne peut être communiqué ou divulgué à des tiers sans son autorisation préalable.

Document Information

Revision	Date	History of the evolution	
001	24 Oct 02	Creation (Preliminary version)	
002	24 Jan. 03	Remove "Preliminary" status. Modification in applicable products list: • Add Q2406D and Q2426D products and Q2406E and Q2426E products • Remove Q2406C and Q2426C products Update sensitivity value for GSM850 and EGSM900 RF bands. Update mechanical drawing.	
003	14 Apr 03	Extract of Design guidelines information	

This document is the sole and exclusive property of WAVECOM. Not to be distributed or divulged without prior written agreement.
Ce document est la propriété exclusive de WAVECOM. Il ne peut être communiqué ou divulgué à des tiers sans son autorisation préalable.

Contents

Document Information 2

Contents 3

Caution 6

Trademarks 6

Overview 7

Reference documents 8

1 General description 9

1.1 General information 9

1.2 Functional description 10
1.2.1 RF functionalities 11
1.2.2 Baseband functionalities 11

1.3 Firmware 12

2 Interfaces 13

2.1 General Purpose Connector (GPC) 13

2.2 Power supply 14
2.2.1 General description 14
2.2.2 Power consumption 15

2.3 Electrical information for digital I/O 17

2.4 LCD interface 18
2.4.1 SPI bus 18
2.4.2 Two-wire interface 18

2.5 SPI Auxiliary bus 18

2.6 Keyboard interface 19

2.7 Main serial link (UART1) 20

2.8 Auxiliary serial link (UART2) 20

2.9 SIM interface 21
2.9.1 General Description 21
2.9.2 SIM 3/5V management 22

2.10 General Purpose Input/Output 23

This document is the sole and exclusive property of WAVECOM. Not to be distributed or divulged without prior written agreement.
Ce document est la propriété exclusive de WAVECOM. Il ne peut être communiqué ou divulgué à des tiers sans son autorisation préalable.

2.11 Activity status indication 23
2.12 Analog to Digital Converter (ADC) 24
2.13 Audio interface 25
2.13.1 Microphone inputs 25
2.13.1.1 Common microphone inputs characteristics 25
2.13.1.2 Main Microphone Inputs (MIC2) 27
2.13.1.3 Auxiliary Microphone Inputs (MIC1) 27
2.13.2 Speaker outputs 28
2.13.2.1 Common speaker outputs characteristics 28
2.13.2.2 Speaker 2 Outputs 29
2.13.2.3 Speaker 1 Outputs 29
2.13.3 Buzzer Output 29
2.14 Battery charging interface 30
2.14.1 Hardware description 30
2.14.2 Li-ion charging procedure 31
2.15 ON / ~OFF 32
2.15.1 General description 32
2.15.2 Operating sequences 33
2.15.2.1 Power ON 33
2.15.2.2 Power OFF 34
2.16 BOOT (optional) 34
2.17 Reset signal (~RST) 35
2.17.1 General description 35
2.17.2 Reset sequence 36
2.18 External Interrupt (~INTR) 36
2.19 VCC output 37
2.20 Real Time Clock Supply (VCC_RTC) 37
2.21 RF interface 37
2.21.1 RF connections 38
2.21.1.1 General 38
2.21.1.2 Antenna directly connected to the module: matching circuit 38
2.21.2 RF performances 40
2.21.3 Antenna specifications 40

3 Technical specifications 42

3.1 General Purpose Connector pin out description 42
3.2 Environmental Specifications 46
3.3 Mechanical specifications 47
3.3.1 Physical characteristics 47
3.3.2 Mechanical drawings 47

4 Appendix 49

4.1 Wavecom acceptance test 49
4.2 GSM Standard and Recommendations 49
4.3 Safety recommendations (for information only) 52
4.3.1 RF safety 52

This document is the sole and exclusive property of WAVECOM. Not to be distributed or divulged without prior written agreement.
Ce document est la propriété exclusive de WAVECOM. Il ne peut être communiqué ou divulgué à des tiers sans son autorisation préalable.

4.3.1.1 General 52
4.3.1.2 Exposure to RF energy 52
4.3.1.3 Efficient terminal operation 52
4.3.1.4 Antenna care and replacement 52
4.3.2 General safety 53
4.3.2.1 Driving 53
4.3.2.2 Electronic devices 53
4.3.2.3 Vehicle electronic equipment 53
4.3.2.4 Medical electronic equipment 53
4.3.2.5 Aircraft 54
4.3.2.6 Children 54
4.3.2.7 Blasting areas 54
4.3.2.8 Potentially explosive atmospheres 54
4.4 General Purpose Connector data sheet 57

This document is the sole and exclusive property of WAVECOM. Not to be distributed or divulged without prior written agreement.
Ce document est la propriété exclusive de WAVECOM. Il ne peut être communiqué ou divulgué à des tiers sans son autorisation préalable.

Caution

Information furnished herein by Wavecom are accurate and reliable. However no responsibility is assumed for its use. Please read carefully the safety precautions for a terminal based on WISMO Quik Q2400 Series.

General information about Wavecom and its range of products is available at the following internet address: http://www.wavecom.com

Trademarks

Some mentioned products are registered trademarks of their respective companies.

This document is the sole and exclusive property of WAVECOM. Not to be distributed or divulged without prior written agreement.
Ce document est la propriété exclusive de WAVECOM. Il ne peut être communiqué ou divulgué à des tiers sans son autorisation préalable.

Overview

This document defines and specifies the WISMO QUIK Q24x6 Series, available under two GSM/GPRS Class 10 dual-band versions:

- **Q2406A**: E-GSM/GPRS **900/1800** MHz version with **16** Mbits of Flash memory and **2** Mbits of SRAM (16/2).
- **Q2406B**: E-GSM/GPRS **900/1800** MHz version with **32** Mbits of Flash memory and **4** Mbits of SRAM (32/4).
- **Q2406D**: E-GSM/GPRS **900/1800** MHz version with **64** Mbits of Flash memory and **8** Mbits of SRAM (64/8). This configuration will be available for handset application and vertical application where UART2 is not used.
- **Q2406E**: E-GSM/GPRS **900/1800** MHz version with **64** Mbits of Flash memory and **4** Mbits of SRAM (64/4). This configuration will be available for handset application and vertical application where UART2 is not used.
- **Q2426A**: GSM/GPRS **850/1900** MHz version with **16** Mbits of Flash memory and **2** Mbits of SRAM (16/2).
- **Q2426B**: GSM/GPRS **850/1900** MHz version with **32** Mbits of Flash memory and **4** Mbits of SRAM (32/4).
- **Q2426D**: GSM/GPRS **850/1900** MHz version with **64** Mbits of Flash memory and **8** Mbits of SRAM (64/8). This configuration will be available for handset application and vertical application where UART2 is not used.
- **Q2426E**: GSM/GPRS **850/1900** MHz version with **64** Mbits of Flash memory and **4** Mbits of SRAM (64/4). This configuration will be available for handset application and vertical application where UART2 is not used.

Note: the WISMO Q24x6 module is an evolution of the Q2403 module with which it is fully hardware and software compatible (except for power consumption).

This document is the sole and exclusive property of WAVECOM. Not to be distributed or divulged without prior written agreement.
Ce document est la propriété exclusive de WAVECOM. Il ne peut être communiqué ou divulgué à des tiers sans son autorisation préalable.

Reference documents

[1] WISMO Quik Q2400 Series Customer Design Guidelines
WM_PRJ_Q2400_PTS_005

[2] WISMO Quik Q2400 Series Manufacturing Guide
WM_PRJ_Q2400_PTS_006

[3] AT Commands Interface Guide
WM_ASW_OAT_UGD_004

[4] Wavecom Acceptance and Verification Plan
WAVE Plan, Release 1.4

[5] Q2406 or Q2426 delta with the Q2403
WM_PRJ_Q2400_PTS_004

This document is the sole and exclusive property of WAVECOM. Not to be distributed or divulged without prior written agreement.
Ce document est la propriété exclusive de WAVECOM. Il ne peut être communiqué ou divulgué à des tiers sans son autorisation préalable.

1 General description

1.1 General information

WISMO Quik Q24x6 sub-series is a range of self-contained E-GSM/GSM-GPRS 900/1800 or 850/1900 dual-band modules including the following features:

- 58.4 x 32.2 x 3.9 mm.
- 2 Watts E-GSM 900/GSM 850 radio section running under 3.6 Volts.
- 1 Watt GSM1800/1900 radio section running under 3.6 Volts.
- Digital section running under 2.8 Volts.
- 3V only SIM interface (for 5 V SIM interface with external adaptation, refer to document [1]).
- Real Time Clock with calendar.
- Battery charge management.
- Echo Cancellation + noise reduction.
- Full GSM or GSM/GPRS software stack.
- Hardware GPRS class 10 capable.
- Complete shielding.
- Complete interfacing through a 60-pin connector:
    - Power supply,
    - Serial link,
    - Audio,
    - SIM card interface,
    - Keyboard,
    - LCD (not available with AT commands).

WISMO Quik Q24x6 sub-series has two external connections:

- RF connection pads (to the antenna),
- 60-pin General Purpose Connector (GPC) to Digital, Keyboard, Audio and Supply.

WISMO Quik Q24x6 sub-series is designed to fit in very small terminals and only some custom functions have to be added to make a complete dual-band solution:

- Keypad and LCD module,
- Earpiece and Microphone,
- Base connector,
- Battery,
- Antenna,
- SIM connector.

This document is the sole and exclusive property of WAVECOM. Not to be distributed or divulged without prior written agreement.
Ce document est la propriété exclusive de WAVECOM. Il ne peut être communiqué ou divulgué à des tiers sans son autorisation préalable.

1.2 Functional description

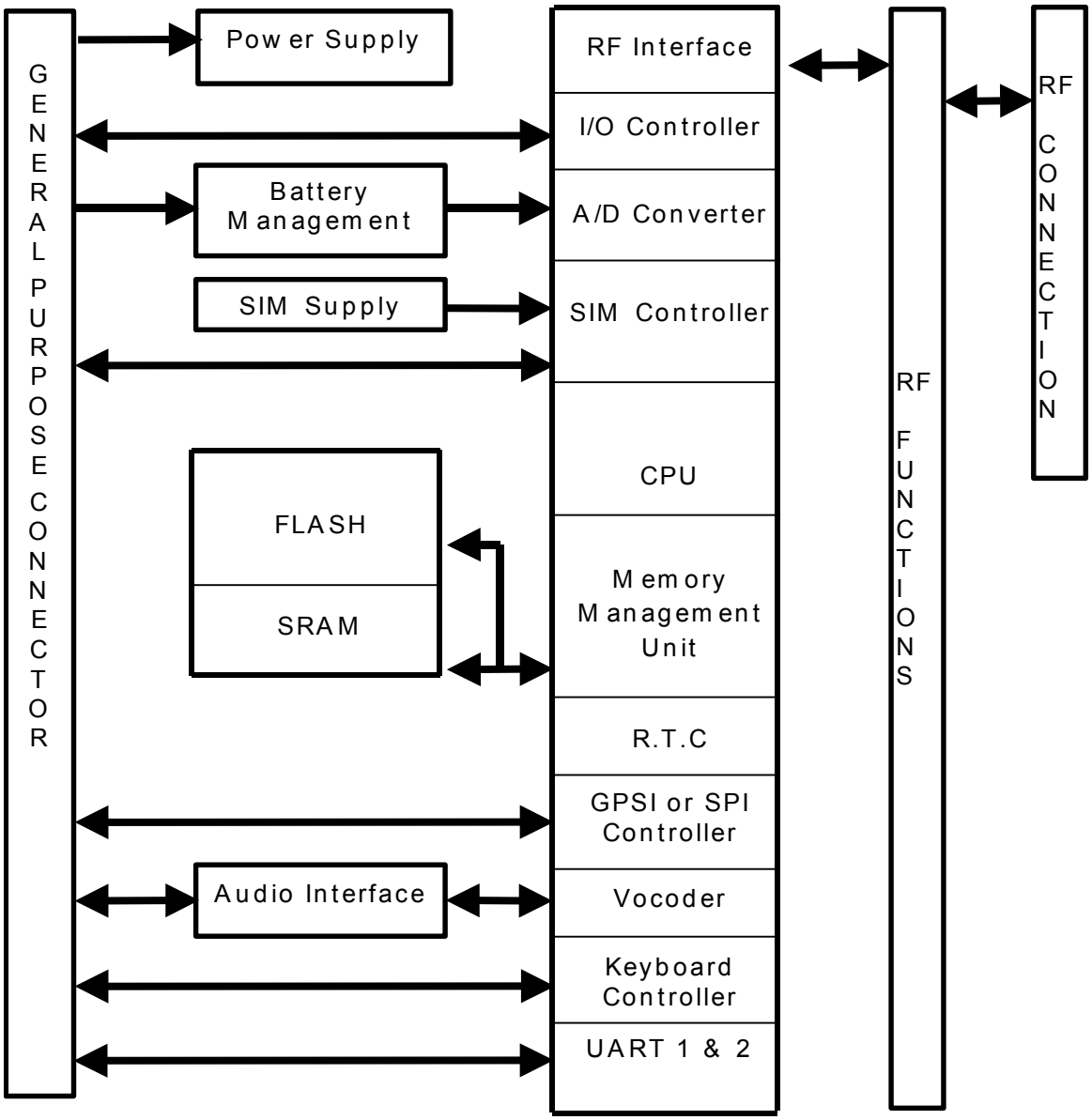

Figure 1: Functional architecture

This document is the sole and exclusive property of WAVECOM. Not to be distributed or divulged without prior written agreement.
Ce document est la propriété exclusive de WAVECOM. Il ne peut être communiqué ou divulgué à des tiers sans son autorisation préalable.

1.2.1 RF functionalities

The Radio Frequency (RF) functionalities comply with the Phase II E-GSM 900/DCS 1800 and GSM 850/PCS 1900 recommendation.

The frequencies are:

Q2406

- Rx (E-GSM 900): 925 to 960 MHz.
- Rx (DCS 1800): 1805 to 1880 MHz.
- Tx (E-GSM 900): 880 to 915 MHz.
- Tx (DCS 1800): 1710 to 1785 MHz.

Q2426

- Rx (GSM 850): 869 to 894 MHz.
- Rx (PCS 1900): 1930 to 1990 MHz.
- Tx (GSM 850): 824 to 849 MHz.
- Tx (PCS 1900): 1850 to 1910 MHz.

The Radio Frequency (RF) part is based on a specific dual band chip including :

- Low-IF Receiver,
- Dual RF (Radio Frequency) synthesizer,
- Digital IF to Baseband Converter,
- Offset PLL (Phase Lock Loop) transmitter,
- 1 (logarithmic) Power Amplifier (PA) controller,
- Dual band Power Amplifier (PA) module.

1.2.2 Baseband functionalities

The digital part of the WISMO Quik Q24x6 sub-series is based on a PHILIPS-VLSI chip (ONE C GSM/GPRS Kernel).

This chipset is using a 0.25 µm mixed technology CMOS, which allows massive integration as well as low current consumption.

This document is the sole and exclusive property of WAVECOM. Not to be distributed or divulged without prior written agreement.
Ce document est la propriété exclusive de WAVECOM. Il ne peut être communiqué ou divulgué à des tiers sans son autorisation préalable.

1.3 Firmware

WISMO Quik Q24x6 sub-series is designed to be integrated into various types of applications such as handsets or vertical applications (telemetry, multimedia,…).

For vertical applications, the firmware offers a set of AT commands to control the module (for further information, refer to document [3]).

☞ **Please be aware that some of these interfaces can not be handled when using the WISMO Quik Q24x6 sub-series driven by AT commands: LCD interface, auxiliary serial link interface and SPI bus.**

This symbol is used to indicate the interfaces not available with AT commands.

These functions have then to be managed externally i.e using the main processor of the application.

This document is the sole and exclusive property of WAVECOM. Not to be distributed or divulged without prior written agreement.
Ce document est la propriété exclusive de WAVECOM. Il ne peut être communiqué ou divulgué à des tiers sans son autorisation préalable.

2 Interfaces

Note:

Some of the WISMO interface signals are multiplexed in order to limit number of pins but this architecture implies some limitation.

For example, in case of using SPI bus, 2-wire bus cannot be used.

☞ Warning:

All external signals must be inactive when the WISMO module is OFF to avoid any damage when starting and allow WISMO module to start correctly.

2.1 General Purpose Connector (GPC)

A 60-pin connector, with 0.5 mm pitch, is provided to interface the WISMO Quik Q24x6 sub-series with a board containing either a LCD module, or a keyboard, or a SIM connector, or a battery connection...

The interfaces available on the GPC are described in the next paragraphs.

The GPC is made by KYOCERA / AVX group with the following reference:

14 5087 060 930 861.

The matting connector has the following reference:

24 5087 060 X00 861.

For further details, refer to paragraph 4.4 General Purpose Connector data sheet.

This document is the sole and exclusive property of WAVECOM. Not to be distributed or divulged without prior written agreement.
Ce document est la propriété exclusive de WAVECOM. Il ne peut être communiqué ou divulgué à des tiers sans son autorisation préalable.

2.2 Power supply

2.2.1 General description

The power supply is one of the key issues in the design of a GSM terminal. Due to the bursted emission in GSM / GPRS, the power supply must be able to deliver high current peaks in a short time. During these peaks the ripple (U_{ripp}) on the supply voltage must not exceed the limits specified in table "Power Supply Voltage" hereafter.

In communication mode, a GSM/GPRS class 2 terminal emits 577 µs radio bursts every 4.615 ms.

In communication mode, a GPRS class 10 terminal emits 1154 µs radio bursts every 4.615 ms.

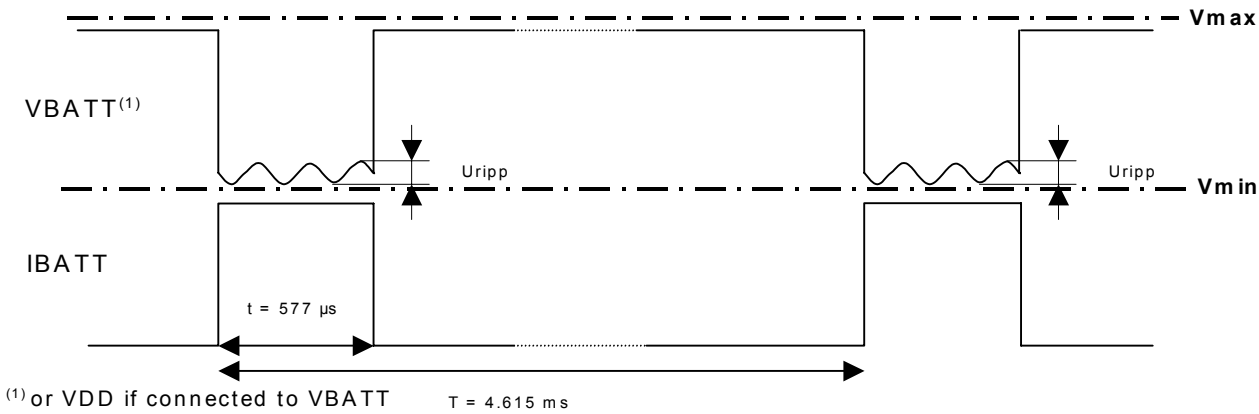

Figure 2: Typical power supply voltage in GSM mode

Two different inputs are provided for the power supply:

- the first one, VBATT is used to supply the RF part,
- the second one, VDD is used to supply the baseband part.

Notes:

- It is possible to connect VBATT to VDD.
- In case of separate power supplies, they have to be in the same state i.e both active or inactive at the same time.

VBATT: supplies directly the RF components with 3.6 V. It is essential to keep a minimum voltage ripple at this connection in order to avoid any phase error. The RF Power Amplifier current (2.0 A peak in GSM /GPRS mode with a 50 Ohms RF output flows with a ratio of:

- 1/8 of the time (around 577 µs every 4.615 ms for GSM/GPRS class 2),
- 2/8 of the time (around 1154 µs every 4.615 ms for GSM/GPRS class 10).

The rising time is around 10 µs.
VDD: supplies the +2.8 V ballast regulators of the WISMO module. It is essential to keep the voltage over 3.1 volts.
The WISMO module shielding case is the grounding. The ground has to be connected on the mother board through a complete layer on the PCB.

This document is the sole and exclusive property of WAVECOM. Not to be distributed or divulged without prior written agreement.
Ce document est la propriété exclusive de WAVECOM. Il ne peut être communiqué ou divulgué à des tiers sans son autorisation préalable.

Power Supply Voltage

	V_{MIN}	V_{NOM}	V_{MAX}	Ripple max (U_{ripp})
VBATT	3.3 V (*)	3.6 V	4.5 V (**)	50 mVpp for freq<200 kHz 500 µVpp for freq>200 kHz
VDD	3.1 V		4.5 V	100 mVpp

(*): This value has to be guaranteed during the burst (with 2.0 A Peak in GSM or GPRS mode).
(**): max operating Voltage Stationary Wave Ratio (VSWR) 2:1.

When supplying the module with a battery, the total impedance (battery+contacts+protections+PCB) should be < 150 mOhms to limit voltage drop-out within emission burst.

Refer to document [1] for further information about power supply design.

2.2.2 Power consumption

The following information is given assuming a 50 Ω RF output.

Power consumption in OFF mode

(module supplied, OFF state, no software running)

	Conditions	I_{NOM}	I_{MAX}
Overall consumption VBATT + VDD	Off	5 µA	10 µA

This document is the sole and exclusive property of WAVECOM. Not to be distributed or divulged without prior written agreement.
Ce document est la propriété exclusive de WAVECOM. Il ne peut être communiqué ou divulgué à des tiers sans son autorisation préalable.

Power consumption in E-GSM/GPRS 900 MHz and GSM/GPRS 850 MHz mode class 10

	Conditions	I_{NOM}	I_{MAX}
VBATT+VDD	During TX bursts @Pcl5	1.60 A peak	1.8 A peak
	During RX bursts	110 mA peak	115 mA peak
	Average 1Rx/1Tx @Pcl5	250 mA	300 mA
	Average 1Rx/1Tx @Pcl8	190 mA	200 mA
	Average GPRS Cl 10 (3Rx/2Tx) @Pcl5	400 mA	510 mA
	Average GPRS Cl 10 (3Rx/2Tx) @Pcl8	260 mA	300 mA
	Average Idle mode	3 mA	7 mA

Power Control Level: Pcl5=2 W typ.; Pcl8=0.5 W typ.

Power consumption in GSM/GPRS 1800 MHz and GSM/GPRS 1900 MHz mode class 10

	Conditions	I_{NOM}	I_{MAX}
VBATT+VDD	During TX bursts @Pcl0	1 A peak	1.5 A peak
	During RX bursts	130 mA peak	140 mA peak
	Average 1Rx/1Tx @Pcl0	190 mA	235 mA
	Average 1Rx/1Tx @Pcl3	150 mA	180 mA
	Average GPRS Cl 10 (3Rx/2Tx) @Pcl0	320 mA	410 mA
	Average GPRS Cl 10 (3Rx/2Tx) @Pcl3	240 mA	270 mA
	Average Idle mode	2 mA	6.5 mA

Power Control Level: Pcl0=1 W typ.; Pcl3=0.25 W typ.

Power Supply Pinout

Signal	Pin number
+VBATT	55, 57, 58, 59, 60
VDD	11
GND	Shielding

The ground connection is done through the shielding ⇨ the four legs have to be soldered to the ground plane.

This document is the sole and exclusive property of WAVECOM. Not to be distributed or divulged without prior written agreement.
Ce document est la propriété exclusive de WAVECOM. Il ne peut être communiqué ou divulgué à des tiers sans son autorisation préalable.

2.3 Electrical information for digital I/O

All digital I/O comply with 3 Volts CMOS.

Operating conditions

Parameter	I/O type	Min	Max	Condition
V_{IL}	CMOS	-0.5 V	0.8 V	
V_{IH}	CMOS	2.1 V	3.0 V	
V_{OL}	1X		0.2 V	I_{OL} = -1 mA
	2X		0.2 V	I_{OL} = -2 mA
	3X		0.2 V	I_{OL} = -3 mA
V_{OH}	1X	2.6 V		I_{OH} = 1 mA
	2X	2.6 V		I_{OH} = 2 mA
	3X	2.6 V		I_{OH} = 3 mA

This document is the sole and exclusive property of WAVECOM. Not to be distributed or divulged without prior written agreement.
Ce document est la propriété exclusive de WAVECOM. Il ne peut être communiqué ou divulgué à des tiers sans son autorisation préalable.

2.4 LCD interface

The WISMO Quik Q24x6 sub-series can be connected to a LCD module driver through either a SPI bus or a two-wire interface.

2.4.1 SPI bus

The SPI bus includes a CLK signal (SPI_CLK), an I/O signal (SPI_IO) and an EN signal (SPI_EN) complying with SPI bus standard.

Pin description

Signal	Pin number	I/O	I/O type	Description
SPI_CLK	10	O	1X	SPI Serial Clock
SPI_IO	8	I/O	CMOS / 1X	SPI Data
SPI_EN *	28	O	1X	SPI Enable

* Multiplexed with GPO3.

2.4.2 Two-wire interface

AT

The two-wire interface includes a CLK signal (SCL) and a DATA signal (SDA) complying with a standard 96 kHz interface. The maximum speed transfer is 400 kbits/s.

Pin description

Signal	Pin number	I/O	I/O type	Description
SCL	10	O	1X	Serial Clock
SDA	8	I/O	CMOS / 1X	Serial Data

2.5 SPI Auxiliary bus

A second SPI Chip Enable (called SPI_AUX) has to be used to add a SPI peripheral to the WISMO Quik Q24x6 sub-series.

Pin description

Signal	Pin number	I/O	I/O type	Description
SPI_CLK	10	O	1X	SPI Serial Clock
SPI_IO	8	I/O	CMOS / 1X	SPI Data
SPI_AUX *	26	O	1X	SPI Aux. Enable

* Multiplexed with GPO0.

This document is the sole and exclusive property of WAVECOM. Not to be distributed or divulged without prior written agreement.
Ce document est la propriété exclusive de WAVECOM. Il ne peut être communiqué ou divulgué à des tiers sans son autorisation préalable.

2.6 Keyboard interface

☞ Warning:

This interface is not FULLY available with AT commands:

An AT command allows to get the input key code (see AT+CMER command description). This code has then to be processed by the application.

This interface provides 10 connections:

- 5 rows (ROW0 to ROW4),
- 5 columns (COL0 to COL4).

The scanning is a digital one, and the debouncing is done in the WISMO module. No discrete components like R, C (Resistor, Capacitor) are needed.

Pin description

Signal	Pin number	I/O	I/O type	Description
ROW0	13	I/O	CMOS / 1X	Row scan
ROW1	15	I/O	CMOS / 1X	Row scan
ROW2	17	I/O	CMOS / 1X	Row scan
ROW3	19	I/O	CMOS / 1X	Row scan
ROW4	21	I/O	CMOS / 1X	Row scan
COL0	23	I/O	CMOS / 1X	Column scan
COL1	25	I/O	CMOS / 1X	Column scan
COL2	27	I/O	CMOS / 1X	Column scan
COL3	29	I/O	CMOS / 1X	Column scan
COL4	31	I/O	CMOS / 1X	Column scan

This document is the sole and exclusive property of WAVECOM. Not to be distributed or divulged without prior written agreement.
Ce document est la propriété exclusive de WAVECOM. Il ne peut être communiqué ou divulgué à des tiers sans son autorisation préalable.

2.7 Main serial link (UART1)

A flexible 6-wire serial interface is available complying with V24 protocol signaling but not with V28 (electrical interface) due to a 2.8 Volts interface.

The signals are:

- TX data (CT103/TX),
- RX data (CT104/RX),
- Request To Send (CT105/RTS),
- Clear To Send (CT106/CTS),
- Data Terminal Ready (CT108-2/DTR),
- Data Set Ready (CT107/DSR).

The set of serial link signals can be required for GSM DATA services application and is generated by the general purpose I/O provided by the WISMO module.

The 2 additional signals are Data Carrier Detect (CT109/DCD) and Ring Indicator (CT125/RI).

Pin description

Signal	Pin number	I/O	I/O type	Description
CT103/TXD1	39	I	CMOS	Transmit serial data
CT104/RXD1	32	O	1X	Receive serial data
CT105/RTS1	30	I	CMOS	Request To Send
CT106/CTS1	37	O	1X	Clear To Send
CT107/DSR1	36	O	1X	Data Set Ready
CT108-2/DTR1	34	I	CMOS	Data Terminal Ready
CT109/DCD1 *	51	O	CMOS / 2X	Data Carrier Detect
CT125/RI1 **	54	O	CMOS / 2X	Ring Indicator
CT102/GND	Shielding legs			Ground

* Multiplexed with GPIO3
** Multiplexed with GPIO2.

The rising time and falling time of the reception signals (mainly CT103) have to be less than 200 ns.

The WISMO Quik Q24x6 sub-series has been designed to be operated using all the serial interface signals. In particular, it is necessary to use RTS and CTS signals for hardware flow control in order to avoid data corruption during transmission.

2.8 Auxiliary serial link (UART2)

For future applications (e.g. Bluetooth connectivity) an auxiliary serial interface (UART2) will be available on Q24x6A and Q24x6B products.

This document is the sole and exclusive property of WAVECOM. Not to be distributed or divulged without prior written agreement.
Ce document est la propriété exclusive de WAVECOM. Il ne peut être communiqué ou divulgué à des tiers sans son autorisation préalable.

☞ Warning:

The auxiliary serial link (UART2) is not available on Q24x6D and Q24x6E products (version with 64 Mbits of Flash memory).

Pin description

Signal	Pin number	I/O	I/O type	Description	Multiplexed with
CT103 / TXD2	18	I	3X	Receive serial data	GPI
CT104 / RXD2	20	O	CMOS	Transmit serial data	GPO2
CT106 / CTS2	24	I	CMOS	Clear To Send	GPIO0
CT105 / RTS2	35	O	2X	Request To Send	GPIO5

2.9 SIM interface

2.9.1 General Description

5 signals are available:

- SIM_VCC: SIM power supply.
- SIM_RST: reset.
- SIM_CLK: clock.
- SIM_DATA: I/O port.
- SIM_PRES: SIM card detect.

The SIM interface controls a 3 V SIM card (and a 5 V SIM card through an external SIM driver, refer to document [1] for more details).

This interface is fully compliant with GSM 11.11 recommendations concerning SIM functions.

Pin description

Signal	Pin number	I/O	I/O type	Description
SIM_CLK	3	O	2X	SIM Clock
SIM_RST	5	O	2X	SIM Reset
SIM_DATA	7	I/O	CMOS / 3X	SIM Data
SIM_VCC	9	O		SIM Power Supply
SIM_PRES	50	I	CMOS	SIM Card Detect

This document is the sole and exclusive property of WAVECOM. Not to be distributed or divulged without prior written agreement.
Ce document est la propriété exclusive de WAVECOM. Il ne peut être communiqué ou divulgué à des tiers sans son autorisation préalable.

Electrical Characteristics

Parameter	Conditions	Min	Typ	Max	Unit
SIM_DATA V_{IH}	I_{IH} = ± 20 µA	0.7xSIM_VCC			V
SIM_DATA V_{IL}	I_{IL} = 1 mA			0.3xSIM_VCC	V
SIM_RST, SIM_DATA SIM_CLK V_{OH}	Source current = 20 µA	SIM_VCC – 0.1V			V
SIM_RST, SIM_DATA SIM_CLK V_{OL}	Sink current = -200 µA			0.1	V
SIM_VCC* Output Voltage	I_{SIMVCC} <= 6 mA	2.70	2.80	2.85	V
SIM_CLK Rise/Fall Time	Loaded with 30 pF			50	ns
SIM_RST, SIM_DATA Rise/Fall Time	Loaded with 30 pF			1	µs
SIM_CLK Frequency	Loaded with 30 pF			3.25	MHz

(*): given for a 3 V interface. An external SIM driver is needed to handle 5 V SIMs.

Note for SIM_PRES connection:

- When not used **SIM_PRES** has to be tied to VCC.
- When used, a low to high transition means that the SIM card is inserted and a high to low transition means that the SIM card is removed.

2.9.2 SIM 3/5V management

The WISMO Quik Q24x6 sub-series module is designed to interface with 3 V SIMs only[1].

Nevertheless, it is possible to manage 3 V and 5 V SIM cards using an external level shifter (refer to customer design guidelines [1]). In this case, depending on the type of SIM detected, the module firmware triggers the GPO0 output signal (pin #26) in order to properly set the external SIM driver level (3V or 5V).

[1] Most of the GSM operators have been providing 3 V SIMs since 1998.

This document is the sole and exclusive property of WAVECOM. Not to be distributed or divulged without prior written agreement.
Ce document est la propriété exclusive de WAVECOM. Il ne peut être communiqué ou divulgué à des tiers sans son autorisation préalable.

2.10 General Purpose Input/Output

The WISMO Quik Q24x6 sub-series provides:

- 6 General Purpose I/O,
- 4 General Purpose Outputs,
- 1 General Purpose Input.

They are used to control any external device such as a LCD or a Keyboard backlight.

Pin description

Signal	Pin number	I/O	I/O type	Description	Multiplexed with
GPIO0	24	I/O	CMOS / 2X	General Purpose I/O	CT106/CTS2
GPIO4	53	I/O	CMOS / 2X	General Purpose I/O	
GPIO5	35	I/O	CMOS / 2X	General Purpose I/O	CT105/RTS2
GPO0	26	O	3X	General Purpose O	SPI_AUX
GPO1	22	O	3X	General Purpose O	
GPO2	20	O	1X	General Purpose O	CT104/RXD2
GPI	18	I	CMOS	General Purpose I	CT103/TXD2
GPO3	28	O	CMOS	General Purpose O	SPI_EN

AT

The following GPIOs are not available (reserved) in case of module running with the AT commands firmware:

Signal	Pin number	I/O	I/O type	Description	Multiplexed with
GPIO1	52	I/O	CMOS / 2X	General Purpose I/O	FLASH LED(*)
GPIO2	54	I/O	CMOS / 2X	General Purpose I/O	CT125/RI1
GPIO3	51	I/O	CMOS / 2X	General Purpose I/O	CT109/DCD1

(*) The FLASH LED signal can be used to drive a LED through an open-collector transistor according to the module activity status.

2.11 Activity status indication

The activity status indication signal can be used to drive a LED through an open-collector transistor according to the module activity status.

This document is the sole and exclusive property of WAVECOM. Not to be distributed or divulged without prior written agreement.
Ce document est la propriété exclusive de WAVECOM. Il ne peut être communiqué ou divulgué à des tiers sans son autorisation préalable.

LED status	WISMO Quik Q24x6 sub-series status	
OFF	Module in download mode or module OFF	
ON	Permanent	Module switched ON, not registered on the network
	Slow flash LED ON for 200 ms, OFF for 2 s	Module switched ON, registered on the network
	Quick flash LED ON for 200 ms, OFF for 600 ms	Module switched ON, registered on the network, communication in progress

Signal	Pin number	I/O	I/O type	Description
FLASH LED	52	I/O	CMOS / 2X	General Purpose I/O

2.12 Analog to Digital Converter (ADC)

An Analog to Digital Converter is provided by the WISMO module. This converter is a 10-bit resolution, ranging from 0 to 2.8 V.

Pin description

Signal	Pin number	I/O	I/O type	Description
AUXV0	33	I	Analog	A/D converter

Electrical Characteristics

Parameter	Min	Max	Unit
Resolution	10		bits
Sampling rate	90.3		Ksps/s
Input signal range	0	2.8V	V
ADC Reference Accuracy	0.75	2	%
Integral Accuracy	+/- 1		LSB
Differential Accuracy	+/- 1		LSB
Input Impedance (R)	10		MΩ
Input Impedance (C)		100	nF

This document is the sole and exclusive property of WAVECOM. Not to be distributed or divulged without prior written agreement.
Ce document est la propriété exclusive de WAVECOM. Il ne peut être communiqué ou divulgué à des tiers sans son autorisation préalable.

2.13 Audio interface

Two different microphone inputs and two different speaker outputs are supported.

The WISMO Quik Q24x6 sub-series also includes an echo cancellation feature which allows hands-free function.

In some case, ESD protection must be added on the audio interface lines.

2.13.1 Microphone inputs

The MIC2 inputs already include the biasing for an electret microphone allowing an easy connection to a handset.

The MIC1 inputs do not include an internal bias. MIC1/SPK1 is then appropriate for a hands-free system or a handset with biasing external to the module.

2.13.1.1 Common microphone inputs characteristics

The connection can be either differential or single-ended but using a differential connection in order to reject common mode noise and TDMA noise is strongly recommended. When using a single-ended connection, be sure to have a very good ground plane, a very good filtering as well as shielding in order to avoid any disturbance on the audio path.

Internal audio filter characteristics

Frequency	Gain
0-150 Hz	< -22 dB
150-180 Hz	< -11 dB
180-200 Hz	< -3 dB
200-3700 Hz	0 dB
>4000 Hz	< -60 dB

The gain of MIC inputs is internally adjusted and can be tuned from 30 dB to 51 dB using an AT command (refer to AT commands documentation [3]).

This document is the sole and exclusive property of WAVECOM. Not to be distributed or divulged without prior written agreement.
Ce document est la propriété exclusive de WAVECOM. Il ne peut être communiqué ou divulgué à des tiers sans son autorisation préalable.

Microphone gain vs Max input voltage (using controller 1*)

Transmit Gain (dB)	Max Vin (mVrms)
+30	43.80
+33	31.01
+36	21.95
+39	15.54
+42	11
+45	7.79
+48	5.51
+51	3.9

(*) for more details, refer to AT commands documentation [3]

Microphone gain vs Max input voltage (using controller 2*)

Transmit Gain (dB)	Max Vin (mVrms)
- 6.5	3031
-6.0	2861
…	…
0.0	1434
…	…
+9.5	480
+10.0	454
+ 30.3	43.80
+ 30.8	41.36
…	…
+ 50.8	4.14
+ 51.3	3.90

(*) for more details, refer to AT commands documentation [3]

This document is the sole and exclusive property of WAVECOM. Not to be distributed or divulged without prior written agreement.
Ce document est la propriété exclusive de WAVECOM. Il ne peut être communiqué ou divulgué à des tiers sans son autorisation préalable.

2.13.1.2 Main Microphone Inputs (MIC2)

The MIC2 inputs are differential ones. They already include the convenient biasing for an electret microphone (0.5 mA and 2 Volts). This electret microphone can be directly connected on these inputs.

The impedance of the microphone 2 has to be around 2 kΩ. These inputs are the standard ones for an handset design while MIC1 inputs can be connected to an external headset or a hands-free kit.

AC coupling is already embedded in the module.

Pin description

Signal	Pin #	I/O	I/O type	Description
MIC2P	46	I	Analog	Microphone 2 positive input
MIC2N	48	I	Analog	Microphone 2 negative input

2.13.1.3 Auxiliary Microphone Inputs (MIC1)

The MIC1 inputs are differential and do not include internal bias. To use these inputs with an electret microphone, bias has to be generated outside the WISMO Quik Q24x6 sub-series module according to the characteristic of this electret microphone. These inputs are the standard ones used for an external headset or a hands-free kit.

The impedance of the microphone 1 has to be around 2 kΩ. These inputs are provided for an external headset or a hands-free kit.

AC coupling is already embedded in the module.

Pin description

Signal	Pin #	I/O	I/O type	Description
MIC1P	42	I	Analog	Microphone 1 positive input
MIC1N	44	I	Analog	Microphone 1 negative input

This document is the sole and exclusive property of WAVECOM. Not to be distributed or divulged without prior written agreement.
Ce document est la propriété exclusive de WAVECOM. Il ne peut être communiqué ou divulgué à des tiers sans son autorisation préalable.

2.13.2 Speaker outputs

2.13.2.1 Common speaker outputs characteristics

The connection can be differential or single-ended but using a differential connection to reject common mode noise and TDMA noise is strongly recommended. Morover in single-ended mode, ½ of the power is lost. When using a single-ended connection, be sure to have a very good ground plane, a very good filtering as well as shielding in order to avoid any disturbance on the audio path.

Speaker outputs SPK1 and SPK2 are push-pull amplifiers and can be loaded down to 150 Ohms and up to 1 nF (see details in table *Speaker gain vs Max output voltage).*

Impedance of the speaker amplifier output in differential mode is : $R \leq 1\Omega$ +/-10 %.

These outputs are differential and the output power can be adjusted by step of 2 dB. The output can be directly connected to a speaker.

Using a single-ended connection also includes losing half of the output power compared to a differential connection.

The gain of the speaker outputs is internally adjusted and can be tuned using an AT command.

Speaker gain vs Max output voltage

Receive Gain (dB) (*)	Max output level (Vrms)	Max.speaker load (Ω)
+2	1.74	150
0	1.38	50
-2	1.099	32
-4	0.873	32
-6	0.693	32
-8	0.551	32
-10	0.437	32
-12	0.347	32
-14	0.276	32
-16	0.219	32
-18	0.174	32
-20	0.138	32
-22	0.110	32
-24	0.087	32
-26	0.069	32

(*) analog gain: might not be significant

This document is the sole and exclusive property of WAVECOM. Not to be distributed or divulged without prior written agreement.
Ce document est la propriété exclusive de WAVECOM. Il ne peut être communiqué ou divulgué à des tiers sans son autorisation préalable.

2.13.2.2 Speaker 2 Outputs

Pin description

Signal	Pin #	I/O	I/O type	Description
SPK2P	45	O	Analog	Speaker 2 positive output
SPK2N	47	O	Analog	Speaker 2 negative output

2.13.2.3 Speaker 1 Outputs

Pin description

Signal	Pin #	I/O	I/O type	Description
SPK1P	41	O	Analog	Speaker 1 positive output
SPK1N	43	O	Analog	Speaker 1 negative output

2.13.3 Buzzer Output

The buzzer output (BUZ) is a digital one. A buzzer can be directly connected between this output and VBATT. The maximum current is 80 mA (PEAK).

Pin description

Signal	Pin #	I/O	I/O type	Description
BUZ	49	O	Analog (open collector)	Buzzer output

Operating conditions

Parameter	Condition	Min	Max	Unit
V_{OL}	$I_{AVERAGE}$ = 40 mA		0.6	V
I_{PEAK}	VBATT = VBATTmax		80	mA
$I_{AVERAGE}$	VBATT = VBATTmax		40	mA

This document is the sole and exclusive property of WAVECOM. Not to be distributed or divulged without prior written agreement.
Ce document est la propriété exclusive de WAVECOM. Il ne peut être communiqué ou divulgué à des tiers sans son autorisation préalable.

2.14 Battery charging interface

2.14.1 Hardware description

The WISMO module supports one battery charging circuit for Li-Ion batteries.

This circuit uses an interface which consists of a current source inputs (CHG_IN) where the constant current has to flow in order to charge the battery.

This current value depends on the battery capacity. It is recommended to provide a current equal to the value of the capacity plus 50 mA. For a 550 mA battery the current will be 600 mA. The maximum current is 800 mA.

A specific AT command (**AT+WBCM**), available from 4.3 level, allows to manage the battery charge (start and stop the charge, enable or disable unsolicited Battery Charge Indications and set the battery charge parameters).

The WISMO module monitors the battery voltage to detect the end of the charge.

The WISMO module also monitors the temperature of the battery through the BAT_TEMP pin which has to be connected to a temperature sensor inside the battery (a NTC resistor for instance).

Pin description

Signal	Pin number	I/O	I/O type	Description
CHG_IN	1, 2, 4	I	Supply	Current source input
BAT_TEMP	38	I	Analog	A/D converter

This document is the sole and exclusive property of WAVECOM. Not to be distributed or divulged without prior written agreement.
Ce document est la propriété exclusive de WAVECOM. Il ne peut être communiqué ou divulgué à des tiers sans son autorisation préalable.

Electrical Characteristics

Parameter	Min	Max	Typ	Unit
BAT_TEMP resolution	10			bits
BAT_TEMP sampling rate	90.3			Ksps/s
BAT_TEMP Input Impedance (R)	4.7			kΩ
BAT_TEMP Input Impedance (C)		100		nF
CHG_IN Voltage (for I=Imax)	5.1*	5.5		V
CHG_IN Current		800		mA
BAT_TEMP Input signal range			2.8	Vpp

* To be parametrized as per battery manufacturer

2.14.2 Li-ion charging procedure

A constant current source has to be provided through **CHG_IN** inputs in order to charge the Li-ion battery, and **BAT_TEMP** input has to be connected to a battery temperature sensor. During this procedure the voltage of the battery is accurately monitored.

The Li-ion charging involves two phases:

- During the first phase, the battery is charged with a constant current until its voltage reaches 4.1 V*,
- During the second phase, the constant current is pulsed by the module. The width and the frequency of the pulse change during this phase in order to ensure a safety charge.

The battery is considered as fully charged when, after a pulse, the voltage remains at a 4.1 V* during more than 10 s.

The Li-ion battery must have an included safety circuit to avoid any discharge or overcharge. This circuit is delivered by the manufacturer inside the battery pack. The impedance of this safety circuit has to be the lowest possible in order to reduce the drop-out of the voltage. This drop-out is due to the RF Power Amplifier current (up to 2.0 A). A maximum of 150 mΩ is required.

(*): To be parametrized as per battery manufacturer

This document is the sole and exclusive property of WAVECOM. Not to be distributed or divulged without prior written agreement.
Ce document est la propriété exclusive de WAVECOM. Il ne peut être communiqué ou divulgué à des tiers sans son autorisation préalable.

2.15 ON / ~OFF

2.15.1 General description

This input is used to switch ON or OFF the WISMO module.

A high level signal has to be provided on the pin ON/~OFF to switch ON the module.

The level of the voltage of this signal has to be maintained between 2.4 V and VDD during a minimum of 1 s.

This signal can be left at high level until switch OFF.

To be able to switch OFF the module, the pin ON/~OFF has to be released. Through the firmware, the module can be switched OFF (using the AT+CPOF command).

Pin description

Signal	Pin number	I/O	I/O type	Description
ON/~OFF	6	I	CMOS	Module Power ON/OFF

Electrical Characteristics

Parameter	Min	Max	Unit
Input Impedance (R)	10		kΩ
Input Impedance (C)		50	pF

Operating conditions

Parameter	I/O type	Min	Max	Unit
V_{IL}		0 V	0.6 V	V
V_{IH}		2.4 V	VDD+0.5 V	V

This document is the sole and exclusive property of WAVECOM. Not to be distributed or divulged without prior written agreement.
Ce document est la propriété exclusive de WAVECOM. Il ne peut être communiqué ou divulgué à des tiers sans son autorisation préalable.

2.15.2 Operating sequences

2.15.2.1 Power ON

Once the module is supplied by the power source, the application must set the ON/~OFF signal to high to start the module power ON sequence.

The ON/~OFF signal must be held for 1 s minimum. After this time, an internal mechanism keeps it on hold. During the power ON sequence, an internal reset is automatically performed by the module for 240 ms (typical). During this phase, any external reset should be avoided.

Once the initialisation is complete (timing is SIM and network dependent) the AT interface answers « OK » to the application[2]. For further details, please refer to the AT commands documentation (AT+WIND, AT+WAIP)

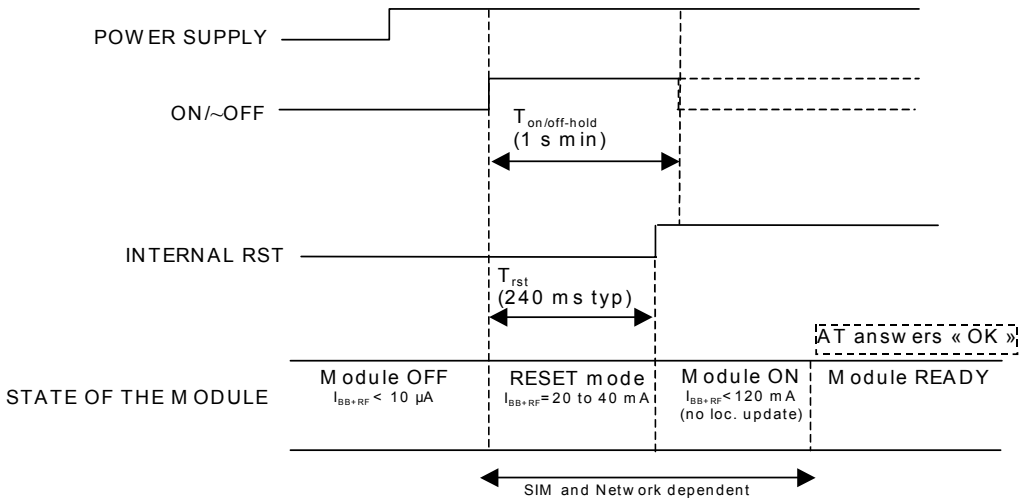

I_{BB+RF} = overall current consumption (Base Band + RF part)

Figure 3: Power-ON sequence diagram (no PIN code activated)

[2] For this, the application has to send AT↵. If the application manages hardware flow control, the AT command can be sent during the initialisation phase. Another solution is to use the AT+WIND command to get an unsolicited status from the module.

This document is the sole and exclusive property of WAVECOM. Not to be distributed or divulged without prior written agreement.
Ce document est la propriété exclusive de WAVECOM. Il ne peut être communiqué ou divulgué à des tiers sans son autorisation préalable.

2.15.2.2 Power OFF

To properly power OFF the module, the application must set the ON/~OFF signal to low and then send the AT+CPOF command to de-register from the network and switch off the module. Once the « OK » response is issued by the module, the power supply can be switched off.

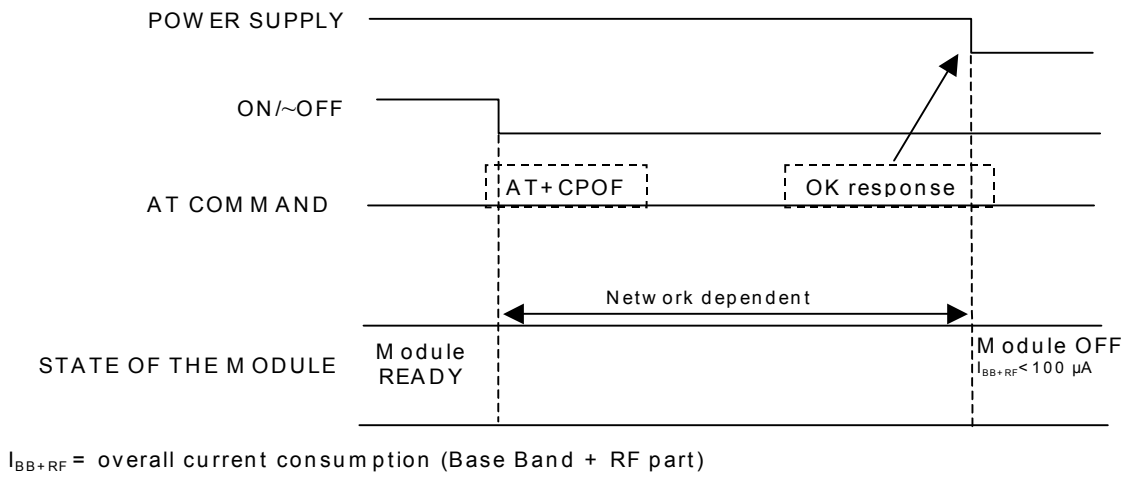

Figure 4: Power-OFF sequence diagram

2.16 BOOT (optional)

This input can be used to download a software in the Flash memory of the WISMO module.

For the applications based on AT commands, this is a backup download procedure only (refer to document [1] Customer Design Guidelines).

The internal boot procedure is started when this pin is low during the reset of the module.

In normal mode this pin has to be left open. In Internal boot mode, low level has to be set through a 1KΩ resistor. If used, this input has to be driven by an open collector or an open drain output:

- BOOT pin 12 = 0, for download mode,
- BOOT pin 12 = 1, for normal mode.

Pin description

Signal	Pin number	I/O	I/O type	Description
BOOT	12	I	CMOS	Flash Downloading

Note : The nominal firmware download procedure is using the X-modem

This document is the sole and exclusive property of WAVECOM. Not to be distributed or divulged without prior written agreement.
Ce document est la propriété exclusive de WAVECOM. Il ne peut être communiqué ou divulgué à des tiers sans son autorisation préalable.

2.17 Reset signal (~RST)

2.17.1 General description

This signal is used to force a reset procedure by providing low level during at least 500 µs.

This signal has to be considered as an emergency reset only. A reset procedure is automatically driven by an internal hardware during the power-up sequence.

This signal can also be used to provide a reset to an external device. It then behaves as an output. If no external reset is necessary this input can be left open. If used (emergency reset), it has to be driven by an open collector or an open drain output:

- ~RST pin 14 = 0, for Module Reset,
- ~RST pin 14 = 1, for normal mode.

Pin description

Signal	Pin number	I/O	I/O type	Description
~RST	14	I/O	SCHMITT	Module Reset

Electrical Characteristics

Parameter	Min	Max	Unit
Input Impedance (R)	4.7		kΩ
Input Impedance (C)		10	nF

Operating conditions

Parameter	Min	Max	Condition
$*V_{T-}$	1.1 V	1.2 V	
$*V_{T+}$	1.7 V	1.9 V	
V_{OL}		0.4 V	I_{OL} = -50 µA
V_{OH}	2.0 V		I_{OH} = 50 µA

* V_{T-}, V_{T+} : Hysteresis thresholds

Additional comments on RESET:

The RESET process is activated either by the external ~RST signal or by an internal signal (coming from a RESET generator). This automatic reset is activated at Power-up.

The module remains in RESET mode as long as the ~RST signal is held low.

This signal should be used only for “emergency” resets.

A software reset is always preferred to a hardware reset.

This document is the sole and exclusive property of WAVECOM. Not to be distributed or divulged without prior written agreement.
Ce document est la propriété exclusive de WAVECOM. Il ne peut être communiqué ou divulgué à des tiers sans son autorisation préalable.

2.17.2 Reset sequence

To activate the « emergency » reset sequence, the ~RST signal has to be set to low for 500 µs minimum.

As soon as the reset is complete, the AT interface answers « OK » to the application. For this, the application has to send AT↵. If the application manages hardware flow control, the AT command can be sent during the initialisation phase. Another solution is to use the AT+WIND command to get an unsollicited status from the module.

For further details, refer to AT commands documentation [3].

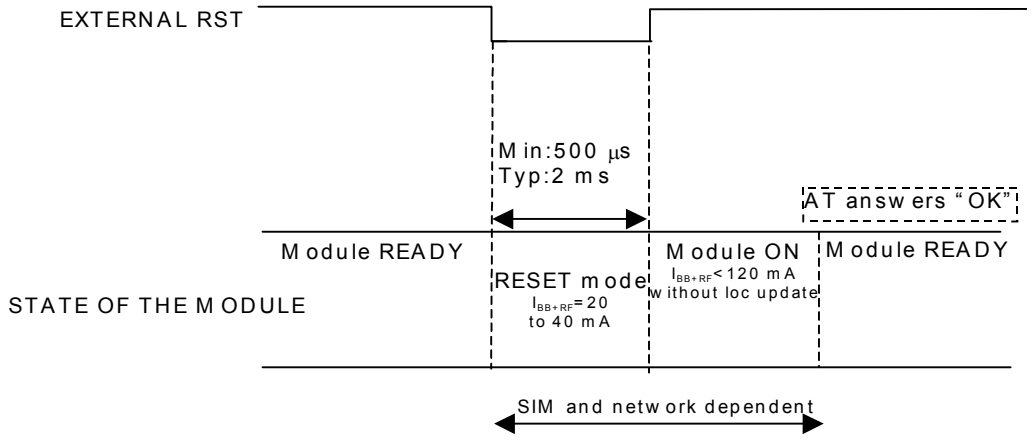

Figure 5: Reset sequence diagram

2.18 External Interrupt (~INTR)

The WISMO module provides an external interrupt input ~INTR. This input is very sensitive and an interrupt is activated on high to low edge. If this signal is not used it can be left open. If used this input has to be driven by an open collector or an open drain output.

This input is used for instance to power OFF automatically the module.

Pin description

Signal	Pin number	I/O	I/O type	Description
~INTR	16	I	CMOS	External Interrupt

Electrical characteristics

Parameter	Min	Max	Unit
V_{IL}	-0.5	0.7	Volt
V_{IH}	2.2	3.0	Volt

This document is the sole and exclusive property of WAVECOM. Not to be distributed or divulged without prior written agreement.
Ce document est la propriété exclusive de WAVECOM. Il ne peut être communiqué ou divulgué à des tiers sans son autorisation préalable.

2.19 VCC output

This output can be used to power some external functions. **VCC** has to be used as a digital power supply. This power supply is available when the module is ON.

Pin description

Signal	Pin number	I/O	I/O type	Description
VCC	40	O	Supply	Digital supply

Operating conditions

Parameter	Condition	Min	Max	Unit
Output voltage	I = 10 mA	2.74	2.86	V
Output Current			10	mA

2.20 Real Time Clock Supply (VCC_RTC)

VCC_RTC input is used to provide a back-up power supply for the internal Real Time Clock. The RTC is supported by the module when powered on but a back-up power supply is needed to save date and time information when the module is switched off.

If the RTC is not used this pin can be left open.

Pin description

Signal	Pin number	I/O	I/O type	Description
VCC_RTC	56	I/O	Supply	RTC Back-up supply

Operating conditions

Parameter	Condition	Min	Max	Unit
Input voltage		2	2.75	V
Input Current	VCC=0 V; t° = +25 °C VCC_RTC=2.5 V		3	µA
Input Current	VCC=0 V; t°:-20 °C / +55 °C VCC_RTC=2.5 V		10	µA
Output voltage		2.4	2.75	V
Output current			2	mA

2.21 RF interface

The impedance is 50 Ohms nominal and the DC impedance is 0 Ohm.

This document is the sole and exclusive property of WAVECOM. Not to be distributed or divulged without prior written agreement.
Ce document est la propriété exclusive de WAVECOM. Il ne peut être communiqué ou divulgué à des tiers sans son autorisation préalable.

2.21.1 RF connections

2.21.1.1 General

There are two possible ways to connect an antenna to the module:

- The antenna can be directly connected to the module on the "Antenna pad" by using a spring contact.
- The antenna can be connected to the module through a coaxial cable. The coaxial cable is connected to both the "Round pad" and the "Ground pad".

Spring contact

Two land patterns set on the PCB support the RF connection which can be used by the application through spring contacts or a soldered RF cable.

Since no standard spring contact is available for WISMO Quik Q24x6 sub-series, this solution requires a specific part to be developed.

Soldered solution

The soldered solution will preferably be based on a RG178 coaxial cable.

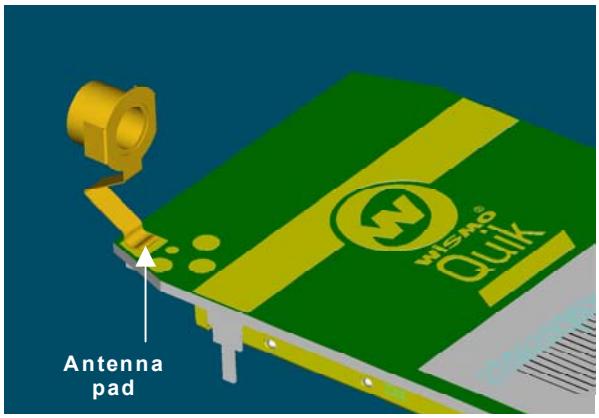

Antenna connection by spring contact.

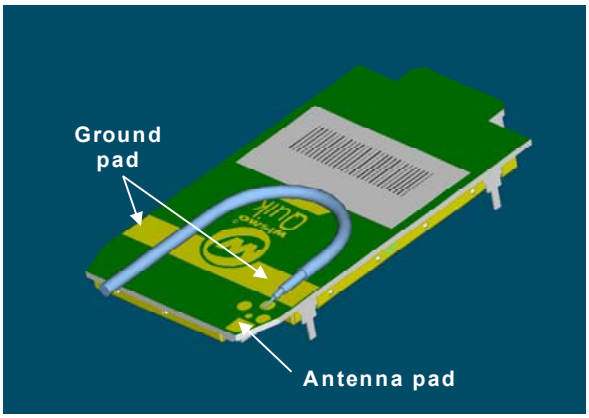

Antenna connection by coaxial cable.

Figure 6: Antenna connection

Note:

- The WISMO Quik Q24x6 sub-series does not include any antenna switch for a car kit but this function can be implemented externally and it can be driven using a GPIO.
- The antenna cable and connector should be chosen in order to minimise losses in the frequency bands used for GSM 850/E-GSM 900MHz and DCS 1800/PCS 1900MHz.
- 0.5 dB can be considered as a maximum value for loss between the module and an external connector.

2.21.1.2 Antenna directly connected to the module: matching circuit

The goal of the matching circuit is to link the antenna (impedance ZA) to the receiver and transmitter access of the module (impedance ZL = 50 Ohm real).

This document is the sole and exclusive property of WAVECOM. Not to be distributed or divulged without prior written agreement.
Ce document est la propriété exclusive de WAVECOM. Il ne peut être communiqué ou divulgué à des tiers sans son autorisation préalable.

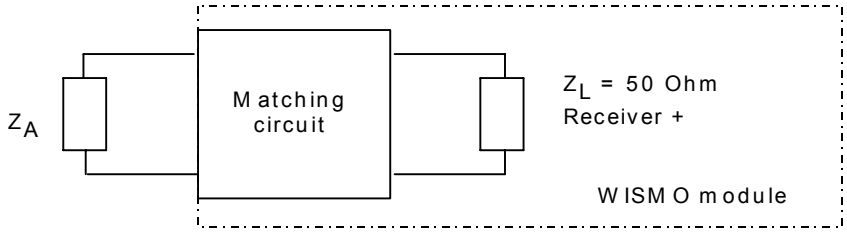

Figure 7: Matching circuit

The matching circuit is composed by four elements implemented (see figure above) on the module connecting the "Antenna pad" to the "Round pad" (access to the receiver and the transmitter).

The four elements of the matching circuit are not yet defined, and depend on each antenna and mechanical integration.

The matching circuit must be verified for each frequency bandwidth:

Q2406:

- 900 MHz (880 to 960 MHz),
- 1800 MHz (1710 to 1880 MHz).

Q2426:

- 850 MHz (824 to 894 MHz),
- 1900 MHz (1850 to 1990 MHz).

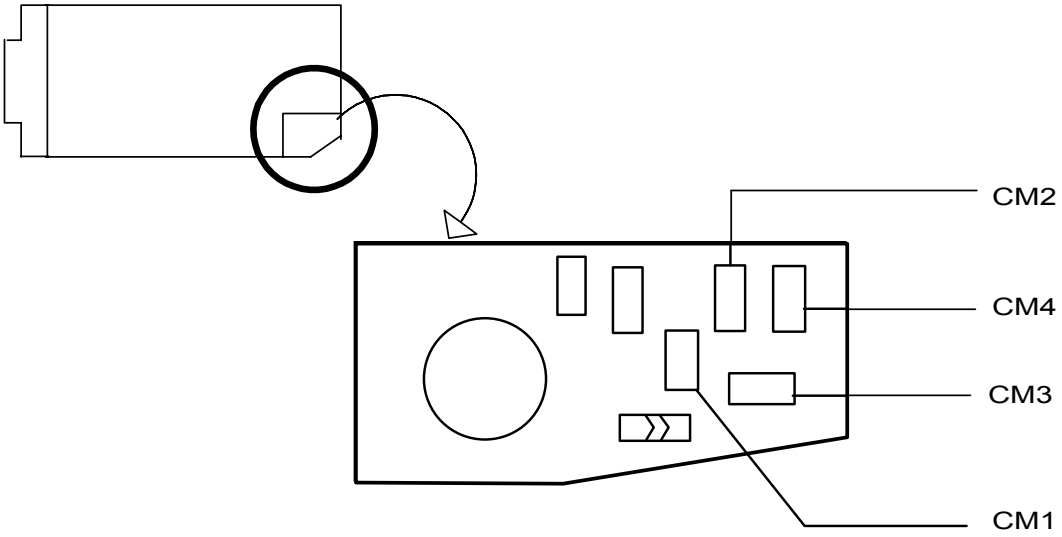

Figure 8: WISMO Q24x6 sub-series antenna matching circuit (bottom view)

This document is the sole and exclusive property of WAVECOM. Not to be distributed or divulged without prior written agreement.
Ce document est la propriété exclusive de WAVECOM. Il ne peut être communiqué ou divulgué à des tiers sans son autorisation préalable.

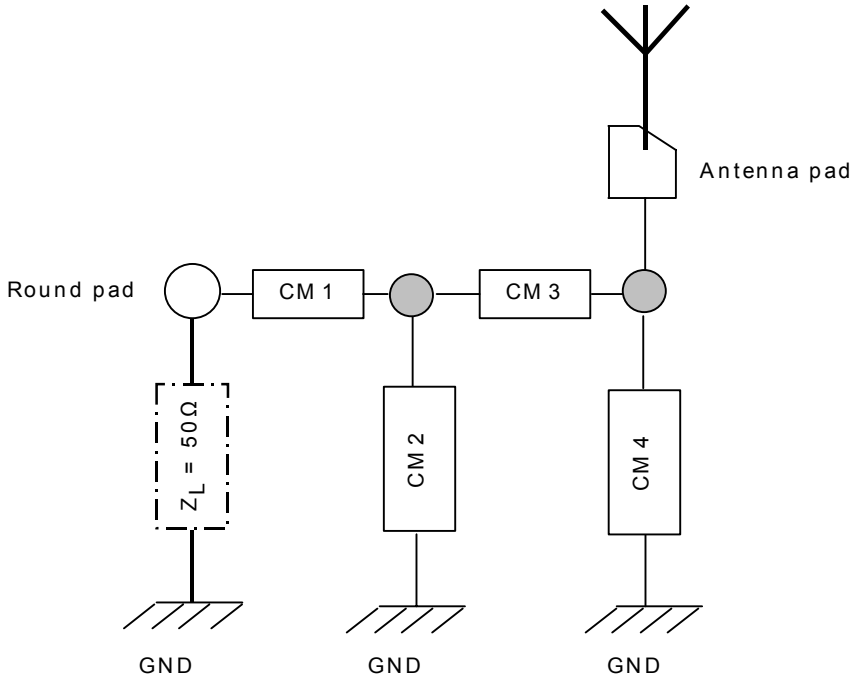

Figure 9: Electrical diagram for the WISMO Quik Q24x6 sub-series

2.21.2 RF performances

RF performances are compliant with the ETSI recommendation GSM 05.05.

The main parameters for **Receiver** are:

- GSM850 Reference Sensitivity (Q2426) = -104 dBm Static & TUHigh
- E-GSM900 Reference Sensitivity (Q2406)= -104 dBm Static & TUHigh
- DCS1800 Reference Sensitivity (Q2406)= -102 dBm Static & TUHigh
- PCS1900 Reference Sensitivity (Q2426)= -102 dBm Static & TUHigh
- Selectivity @ 200 kHz: > +9 dBc
- Selectivity @ 400 kHz: > +41 dBc
- Linear dynamic range: 63 dB
- Co-channel rejection: >= 9 dBc

And for **Transmitter**:

- Maximum output power (E-GSM 900 & GSM850): 33 dBm +/- 2 dB at ambient temperature,
- Maximum output power (DCS1800 & PCS1900): 30 dBm +/- 2 dB at ambient temperature,
- Minimum output power (E-GSM 900 & GSM850): 5 dBm +/- 5 dB at ambient temperature,
- Minimum output power (DCS1800 & PCS1900): 0 dBm +/- 5 dB at ambient temperature.

2.21.3 Antenna specifications

The antenna must fulfil the following requirements:

Frequency depends on application. A dual-Band antenna shall work in these frequency bands and have the following characteristics:

This document is the sole and exclusive property of WAVECOM. Not to be distributed or divulged without prior written agreement.
Ce document est la propriété exclusive de WAVECOM. Il ne peut être communiqué ou divulgué à des tiers sans son autorisation préalable.

Characteristic	Q2406		Q2426	
	E-GSM 900	**DCS 1800**	**GSM 850**	**PCS 1900**
Frequency TX	880 to 915 MHz	1710 to 1785 MHz	824 to 849 MHz	1850 to 1910 MHz
Frequency RX	925 to 960 MHz	1805 to 1880 MHz	869 to 894 MHz	1930 to 1990 MHz
Impedance	50 Ohms			
VSWR **Rx max**	1.5 :1			
VSWR **Tx max**	1.5 :1			
Typical radiated gain	0 dBi in one direction at least			

This document is the sole and exclusive property of WAVECOM. Not to be distributed or divulged without prior written agreement.
Ce document est la propriété exclusive de WAVECOM. Il ne peut être communiqué ou divulgué à des tiers sans son autorisation préalable.

3 Technical specifications

3.1 General Purpose Connector pin out description

Pin #	Name	I/O	I/O type	Description	Comment
1	CHG_IN	I	Supply	Supply for battery charging	High current
2	CHG_IN	I	Supply	Supply for battery charging	High current
3	SIM_CLK	O	2 X	Clock for SIM interface	
4	CHG_IN	I	Supply	Supply for battery charging	High current
5	SIM_RST	O	2 X	Reset for SIM interface	
6	ON/~OFF	I	CMOS	Power ON/OFF control	
7	SIM_DATA	I/O	CMOS / 3X	I/O for SIM interface	
8	SDA/SPI_IO	I/O	CMOS/1X	Wire interface or SPI Serial Data	
9	SIM_VCC	O	Supply	SIM card supply	6 mA max
10	SCL/SPI_CLK	O	1X	Wire interface or SPI Serial clock	
11	VDD	I	Supply	Low power supply	3.1 V minimum or connected to VBATT
12	BOOT	I	CMOS	BOOT	Pull down through 1 KΩ for Flash downloading
13	ROW0	I/O	CMOS/1X	Keyboard Row	
14	~RST	I/O	SCHMITT	Module Reset	Active low
15	ROW1	I/O	CMOS/1X	Keyboard Row	
16	~INTR	I	CMOS	External interrupt	Active low. 100 KΩ Pull-up inside
17	ROW2	I/O	CMOS/1X	Keyboard Row	
18	GPI or CT103/TXD2 *	I	CMOS or 3x	General Purpose Input or Aux.serial Link (UART2)	100K Pull-down inside - Multiplexed

This document is the sole and exclusive property of WAVECOM. Not to be distributed or divulged without prior written agreement.
Ce document est la propriété exclusive de WAVECOM. Il ne peut être communiqué ou divulgué à des tiers sans son autorisation préalable.

Pin #	Name	I/O	I/O type	Description	Comment
19	ROW3	I/O	CMOS/1X	Keyboard Row	
20	GPO2 or CT104/RXD2 *	O	1X or CMOS	General Purpose Output or Aux.serial Link (UART2)	Multiplexed
21	ROW4	I/O	CMOS/1X	Keyboard Row	
22	GPO1	O	3X	General Purpose Output	
23	COL0	I/O	CMOS/1X	Keyboard Column	
24	GPIO0 or CT106/CTS2 *	I/O	CMOS/2X or CMOS	General Purpose I/O or Aux. serial Link (UART2)	Multiplexed
25	COL1	I/O	CMOS/1X	Keyboard Column	
26	GPO0 or SPI_AUX	O	3X or 1X	General Purpose Output or SPI Aux Or SIM 3 V / 5 V	Multiplexed
27	COL2	I/O	CMOS/1X	Keyboard Column	
28	SPI_EN or GPO3	O	1X or CMOS	SPI enable or General Purpose Output	Multiplexed
29	COL3	I/O	CMOS/1X	Keyboard Column	
30	CT105/RTS1	I	CMOS	Serial link interface Request To Send (UART1)	Pull up to VCC with 100 kΩ when not used
31	COL4	I/O	CMOS/1X	Keyboard Column	
32	CT104/RXD1	O	1X	Serial link interface Receive (UART1)	
33	AUXV0	I	Analog	Auxiliary ADC input 0	Can be tied to GND if not used
34	CT108-2/DTR1	I	CMOS	Serial link interface Data Terminal Ready (UART1)	Pull up to VCC with 100 kΩ when not used
35	GPIO5 or CT105/RTS2 *	I/O	CMOS / 2X or 2X	General Purpose I/O or Aux. serial Link (UART2)	Multiplexed
36	CT107/DSR1	O	1X	Serial link interface Data Set Ready (UART1)	
37	CT106/CTS1	O	1X	Serial link interface Clear To Send (UART1)	
38	BAT_TEMP	I	Analog	ADC input for battery temperature measurement	Can be tied to GND if not used
39	CT103/TXD1	I	CMOS	Serial link interface Transmit	Pull up to VCC with 100 kΩ when not

This document is the sole and exclusive property of WAVECOM. Not to be distributed or divulged without prior written agreement.
Ce document est la propriété exclusive de WAVECOM. Il ne peut être communiqué ou divulgué à des tiers sans son autorisation préalable.

Pin #	Name	I/O	I/O type	Description	Comment
				(UART1)	used
40	VCC	O	Supply	2.8 V digital supply output	10 mA max.
41	SPK1P	O	Analog	Speaker 1 positive output	
42	MIC1P	I	Analog	Microphone 1 positive input	
43	SPK1N	O	Analog	Speaker 1 negative output	
44	MIC1N	I	Analog	Microphone 1 negative input	
45	SPK2P	O	Analog	Speaker 2 positive output	
46	MIC2P	I	Analog	Microphone 2 positive input	
47	SPK2N	O	Analog	Speaker 2 negative output	
48	MIC2N	I	Analog	Microphone 2 negative input	
49	BUZ	O	Analog	Buzzer output	80 mA max
50	SIM_PRES	I	CMOS	SIM Card Detect	
51	GPIO3 or CT109/DCD1	I/O O	CMOS/2X	General Purpose I/O Serial interface Data Carrier Detect (UART1)	Multiplexed
52	GPIO1 FLASH LED	I/O	CMOS/2X	General Purpose I/O Module State	Multiplexed
53	GPIO4	I/O	CMOS/2X	General Purpose I/O	
54	GPIO2 or CT125 / RI1	I/O O	CMOS/2X	General Purpose I/O Serial interface Ring Indicator (UART1)	Multiplexed
55	+VBATT		Supply	Battery Input	High current
56	VCC_RTC	I/O	Supply	RTC back-up supply	
57	+VBATT		Supply	Battery Input	High current
58	+VBATT		Supply	Battery Input	High current
59	+VBATT		Supply	Battery Input	High current
60	+VBATT		Supply	Battery Input	High current

* Auxiliary Serial link not available on Q24x6D and Q24x6E products

This document is the sole and exclusive property of WAVECOM. Not to be distributed or divulged without prior written agreement.
Ce document est la propriété exclusive de WAVECOM. Il ne peut être communiqué ou divulgué à des tiers sans son autorisation préalable.

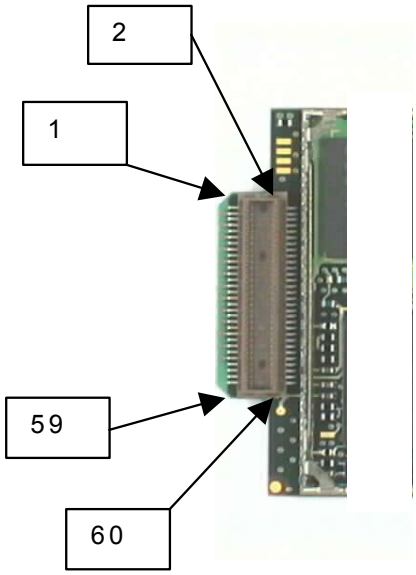

Figure 10: WISMO Quik Q24x6 sub-series pin position (bottom view)

This document is the sole and exclusive property of WAVECOM. Not to be distributed or divulged without prior written agreement.
Ce document est la propriété exclusive de WAVECOM. Il ne peut être communiqué ou divulgué à des tiers sans son autorisation préalable.

3.2 Environmental Specifications

Conditions	Temperature range
Operating / Full GSM specifications compliant	-20 °C to +55 °C
Storage	-30 °C to +85 °C

		ENVIRONMENTAL CLASSES		
TYPE OF TEST	STANDARDS	STORAGE Class 1.2	TRANSPORTATION Class 2.3	OPERATING (PORT USE) Class 7.3
Cold	IEC 68-2.1 Ab test	-25° C 72 h	-40° C 72 h	-20° C (GSM900) 16 h -10° C (GSM1800/1900) 16h
Dry heat	IEC 68-2.2 Bb test	+70° C 72 h	+70° C 72 h	+55° C 16 h
Change of temperature	IEC 68-2.14 Na/Nb test		-40° / +30° C 5 cycles t1 = 3 h	-20° / +30° C (GSM900) 3 cycles -10° / +30° C (GSM1800/1900): 3 cycles t1 = 3 h
Damp heat cyclic	IEC 68-2.30 Db test	+30° C 2 cycles 90% - 100% RH variant 1	+40° C 2 cycles 90% - 100% RH variant 1	+40° C 2 cycles 90% - 100% RH variant 1
Damp heat	IEC 68-2.56 Cb test	+30° C 4 days	+40° C 4 days	+40° C 4 days
Sinusoidal vibration	IEC 68-2.6 Fc test	5 - 62 Hz : 5 mm / s 62 - 200Hz : 2 m / s2 3 x 5 sweep cycles		
Random vibration wide band	IEC 68-3.36 Fdb test		5 - 20 Hz : 0.96 m2 / s3 20 - 500Hz : - 3 dB / oct 3 x 10 min	10 -12 Hz : 0.96 m2 / s3 12 - 150Hz : - 3 dB / oct 3 x 30 min

Electro-Static Discharge (ESD):

According to the norm **EN 61000-4-2**, the maximum ESD level supported by the Q24x6 sub-series is ±4 kV for all the pins including the antenna connector.

Humidity:

According to **IPC/JEDEC J-STD-033**, the moisture class of the Q2400 series is **level 3**. The floor life from the opening of the sealed bag is 168 hours.

Reflow soldering:

The WISMO Quik Q2400 series does not support any reflow soldering.

This document is the sole and exclusive property of WAVECOM. Not to be distributed or divulged without prior written agreement.
Ce document est la propriété exclusive de WAVECOM. Il ne peut être communiqué ou divulgué à des tiers sans son autorisation préalable.

3.3 Mechanical specifications

3.3.1 Physical characteristics

The WISMO Quik Q24x6 Series module has a complete self-contained shield.

- Dimensions : 58.4 x 32.2 x 3.9 mm external dimensions (except shielding pins)
- Weight : <11 g

3.3.2 Mechanical drawings

The next page gives the mechanical specifications of WISMO Quik Q24x6 sub-series.

This document is the sole and exclusive property of WAVECOM. Not to be distributed or divulged without prior written agreement.
Ce document est la propriété exclusive de WAVECOM. Il ne peut être communiqué ou divulgué à des tiers sans son autorisation préalable.

Insert here mechanical drawing

This document is the sole and exclusive property of WAVECOM. Not to be distributed or divulged without prior written agreement.
Ce document est la propriété exclusive de WAVECOM. Il ne peut être communiqué ou divulgué à des tiers sans son autorisation préalable.

4 Appendix

4.1 Wavecom acceptance test

The WISMO Quik Q24x6 sub-series complies with Wavecom standard acceptance test plan (Refer to document [4]).

4.2 GSM Standard and Recommendations

The WISMO Quik Q24x6 sub-series is compliant with the following GSM ETSI, 3GPP, GCF and NAPRD03 recommendations for Phase II.

Specification Reference	Title
3GPP TS 45.005 v5.5.0 (2002-08) Release 5	Technical Specification Group GSM/EDGE. Radio Access Network; Radio transmission and reception
GSM 02.07 V8.0.0 (1999-07)	Digital cellular telecommunications system (Phase 2+); Mobile Stations (MS) features (GSM 02.07 version 8.0.0 Release 1999)
GSM 02.60 V8.1.0 (1999-07)	Digital cellular telecommunications system (Phase 2+); General Packet Radio Service (GPRS); Service description, Stage 1 (GSM 02.60 version 8.1.0 Release 1999)
GSM 03.60 V7.9.0 (2002-09)	Technical Specification Group Services and System Aspects; Digital cellular telecommunications system (Phase 2+); General Packet Radio Service (GPRS); Service description; Stage 2 (Release 1998)
3GPP TS 43.064 V5.0.0 (2002-04)	Technical Specification Group GERAN; Digital cellular telecommunications system (Phase 2+); General Packet Radio Service (GPRS); Overall description of the GPRS radio interface; Stage 2 (Release 5)
3GPP TS 03.22 V8.7.0 (2002-08)	Technical Specification Group GSM/EDGE. Radio Access Network; Functions related to Mobile Station (MS) in idle mode and group receive mode; (Release 1999)
3GPP TS 03.40 V7.5.0 (2001-12)	Technical Specification Group Terminals; Technical realization of the Short Message Service (SMS) (Release 1998)
3GPP TS 03.41 V7.4.0 (2000-09)	Technical Specification Group Terminals; Technical realization of Cell Broadcast Service (CBS) (Release 1998)
ETSI EN 300 903 V8.1.1 (2000-11)	Digital cellular telecommunications system (Phase 2+); Transmission planning aspects of the speech service in the GSM Public Land Mobile Network (PLMN) system (GSM 03.50 version

This document is the sole and exclusive property of WAVECOM. Not to be distributed or divulged without prior written agreement.
Ce document est la propriété exclusive de WAVECOM. Il ne peut être communiqué ou divulgué à des tiers sans son autorisation préalable.

Specification Reference	Title
	8.1.1 Release 1999)
3GPP TS 04.06 V8.2.1 (2002-05)	Technical Specification Group GSM/EDGE Radio Access Network; Mobile Station - Base Station System (MS - BSS) interface; Data Link (DL) layer specification (Release 1999)
3GPP TS 04.08 V7.18.0 (2002-09)	Technical Specification Group Core Network; Digital cellular telecommunications system (Phase 2+); Mobile radio interface layer 3 specification (Release 1998)
3GPP TS 04.10 V7.1.0 (2001-12)	Technical Specification Group Core Networks; Mobile radio interface layer 3 Supplementary services specification; General aspects (Release 1998)
3GPP TS 04.11 V7.1.0 (2000-09)	Technical Specification Group Core Network; Digital cellular telecommunications system (Phase 2+); Point-to-Point (PP) Short Message Service (SMS) support on mobile radio interface (Release 1998)
3GPP TS 45.005 v5.5.0 (2002-08)	Technical Specification Group GSM/EDGE. Radio Access Network; Radio transmission and reception (Release 5)
3GPP TS 45.008 V5.8.0 (2002-08)	Technical Specification Group GSM/EDGE Radio Access Network; Radio subsystem link control (Release 5)
3GPP TS 45.010 V5.1.0 (2002-08)	Technical Specification Group GSM/EDGE Radio Access Network; Radio subsystem synchronization (Release 5)
3GPP TS 46.010 V5.0.0 (2002-06)	Technical Specification Group Services and System Aspects; Full rate speech; Transcoding (Release 5)
3GPP TS 46.011 V5.0.0 (2002-06)	Technical Specification Group Services and System Aspects; Full rate speech; Substitution and muting of lost frames for full rate speech channels (Release 5)
3GPP TS 46.012 V5.0.0 (2002-06)	Technical Specification Group Services and System Aspects; Full rate speech; Comfort noise aspect for full rate speech traffic channels (Release 5)
3GPP TS 46.031 V5.0.0 (2002-06)	Technical Specification Group Services and System Aspects; Full rate speech; Discontinuous Transmission (DTX) for full rate speech traffic channels (Release 5)
3GPP TS 46.032 V5.0.0 (2002-06)	Technical Specification Group Services and System Aspects; Full rate speech; Voice Activity Detector (VAD) for full rate speech traffic channels (Release 5)
TS 100 913V8.0.0 (1999-08)	Digital cellular telecommunications system (Phase 2+); General on Terminal Adaptation Functions (TAF) for Mobile Stations (MS) (GSM 07.01 version 8.0.0 Release 1999)
GSM 09.07 V8.0.0 (1999-08)	Digital cellular telecommunications system (Phase 2+); General requirements on interworking between the Public Land Mobile

This document is the sole and exclusive property of WAVECOM. Not to be distributed or divulged without prior written agreement.
Ce document est la propriété exclusive de WAVECOM. Il ne peut être communiqué ou divulgué à des tiers sans son autorisation préalable.

Specification Reference	Title
	Network (PLMN) and the Integrated Services Digital Network (ISDN) or Public Switched Telephone Network (PSTN) (GSM 09.07 version 8.0.0 Release 1999)
3GPP TS 51.010-1 v5.0.0 (2002-09)	Technical Specification Group GSM/EDGE ; Radio Access Network ;Digital cellular telecommunications system (Phase 2+);Mobile Station (MS) conformance specification; Part 1: Conformance specification (Release 5)
3GPP TS 51.011 V5.0.0 (2001-12)	Technical Specification Group Terminals; Specification of the Subscriber Identity Module - Mobile Equipment (SIM - ME) interface (Release 5)
ETS 300 641 (1998-03)	Digital cellular telecommunications system (Phase 2); Specification of the 3 Volt Subscriber Identity Module - Mobile Equipment (SIM-ME) interface (GSM 11.12 version 4.3.1)
GCF-CC V3.7.1 (2002-08)	Global Certification Forum – Certification criteria
NAPRD03 V2.6.0 (2002-06)	North America Permanent Reference Document for PTCRB tests

This document is the sole and exclusive property of WAVECOM. Not to be distributed or divulged without prior written agreement.
Ce document est la propriété exclusive de WAVECOM. Il ne peut être communiqué ou divulgué à des tiers sans son autorisation préalable.

4.3 Safety recommendations (for information only)

IMPORTANT

FOR THE EFFICIENT AND SAFE OPERATION OF

YOUR GSM APPLICATION BASED ON WISMO Quik Q24x6 Series

PLEASE READ THIS INFORMATION CAREFULLY

4.3.1 RF safety

4.3.1.1 General

Your GSM terminal[3] is based on the GSM standard for cellular technology. The GSM standard is spread all over the world. It covers Europe, Asia and some parts of America and Africa. This is the most used telecommunication standard.

Your GSM terminal is actually a low power radio transmitter and receiver. It sends out and receives radio frequency energy. When you use your GSM application, the cellular system which handles your calls controls both the radio frequency and the power level of your cellular modem.

4.3.1.2 Exposure to RF energy

There has been some public concern about possible health effects of using GSM terminals. Although research on health effects from RF energy has focused on the current RF technology for many years, scientists have begun research regarding newer radio technologies, such as GSM.

After existing research had been reviewed, and after compliance to all applicable safety standards had been tested, it has been concluded that the product was fitted for use.

If you are concerned about exposure to RF energy there are things you can do to minimize exposure. Obviously, limiting the duration of your calls will reduce your exposure to RF energy. In addition, you can reduce RF exposure by operating your cellular terminal efficiently by following the below guidelines.

4.3.1.3 Efficient terminal operation

For your GSM terminal to operate at the lowest power level, consistent with satisfactory call quality:

- If your terminal has an extendible antenna, extend it fully. Some models allow you to place a call with the antenna retracted. However your GSM terminal operates more efficiently with the antenna fully extended.
- Do not hold the antenna when the terminal is « IN USE ». Holding the antenna affects call quality and may cause the modem to operate at a higher power level than needed.

4.3.1.4 Modular Transmitter

Modular transmitter. This device is to be used only for mobile and fixed applications.
The antenna(s) used for this transmitter must be installed to provide a separation distance of at least 20 cm from all persons and must not be co-located or operating in conjunction with any other antenna or transmitter. The antenna(s) used for this transmitter must not exceed

[3] based on WISMO2D

This document is the sole and exclusive property of WAVECOM. Not to be distributed or divulged without prior written agreement.
Ce document est la propriété exclusive de WAVECOM. Il ne peut être communiqué ou divulgué à des tiers sans son autorisation préalable.

a gain of 3 dBi for mobile operation and 7 dBi for fixed operation. Users and OEM integrators must be provided with antenna installation instructions and transmitter operating conditions for satisfying RF exposure compliance. OEM must also be provided with labelling instructions. This device contains 900 MHz GSM functions that are not operational in U.S. Territories. This filing is only applicable for GSM 850 MHz and 1900 MHz PCS operations.

4.3.1.5 Antenna care and replacement

Do not use the GSM terminal with a damaged antenna. If a damaged antenna comes into contact with the skin, a minor burn may result. Replace a damaged antenna immediately. Consult your manual to see if you may change the antenna yourself. If so, use only a manufacturer-approved antenna. Otherwise, have your antenna repaired by a qualified technician.

Use only the supplied or approved antenna. Unauthorized antennas, modifications or attachments could damage the terminal and may contravene local RF emission regulations or invalidate type approval.

4.3.2 General safety

4.3.2.1 Driving

Check the laws and the regulations regarding the use of cellular devices in the area where you have to drive as you always have to comply with them. When using your GSM terminal while driving, please:

- give full attention to driving,
- pull off the road and park before making or answering a call if driving conditions so require.

4.3.2.2 Electronic devices

Most electronic equipment, for example in hospitals and motor vehicles, is shielded from RF energy. However RF energy may affect some improperly shielded electronic equipment.

4.3.2.3 Vehicle electronic equipment

Check your vehicle manufacturer representative to determine if any on-board electronic equipment is adequately shielded from RF energy.

4.3.2.4 Medical electronic equipment

Consult the manufacturer of any personal medical devices (such as pacemakers, hearing aids, etc...) to determine if they are adequately shielded from external RF energy.

Turn your terminal **OFF** in health care facilities when any regulations posted in the area instruct you to do so. Hospitals or health care facilities may be using RF monitoring equipment.

This document is the sole and exclusive property of WAVECOM. Not to be distributed or divulged without prior written agreement.
Ce document est la propriété exclusive de WAVECOM. Il ne peut être communiqué ou divulgué à des tiers sans son autorisation préalable.

4.3.2.5 Aircraft

Turn your terminal OFF before boarding any aircraft.

Use it on the ground only with crew permission.

Do not use it in the air.

To prevent possible interference with aircraft systems, Federal Aviation Administration (FAA) regulations require you to have permission from a crew member to use your terminal while the aircraft is on the ground. To prevent interference with cellular systems, local RF regulations prohibit using your modem while airborne.

4.3.2.6 Children

Do not allow children to play with your GSM terminal. It is not a toy. Children could hurt themselves or others (by poking themselves or others in the eye with the antenna, for example). Children could damage the modem, or make calls that increase your modem bills.

4.3.2.7 Blasting areas

To avoid interfering with blasting operations, turn your unit OFF when in a « blasting area » or in areas posted: « turn off two-way radio ». Construction crew often use remote control RF devices to set off explosives.

4.3.2.8 Potentially explosive atmospheres

Turn your terminal **OFF** when in any area with a potentially explosive atmosphere. It is rare, but your modem or its accessories could generate sparks. Sparks in such areas could cause an explosion or fire resulting in bodily injuries or even death.

Areas with a potentially explosive atmosphere are often, but not always, clearly marked. They include fuelling areas such as petrol stations; below decks on boats; fuel or chemical transfer or storage facilities; and areas where the air contains chemicals or particles, such as grain, dust, or metal powders.

Do not transport or store flammable gas, liquid, or explosives, in the compartment of your vehicle which contains your terminal or accessories.

Before using your terminal in a vehicle powered by liquefied petroleum gas (such as propane or butane) ensure that the vehicle complies with the relevant fire and safety regulations of the country in which the vehicle is to be used.

4.3.3 FCC and Industry Canada Regulatory compliance

This device complies with Part 15 of the FCC Rules. Operation is subject to the following two conditions: (1) this device may not cause harmful interference, and (2) this device must accept any interference received, including interference that may cause undesired operation.

Your mobile device is a low power radio transmitter and receiver. When it is ON, it receives and also sends out radio frequency (RF) signals. In August 1996, the Federal Communications Commission (FCC) adopted RF exposure guidelines with safety levels for mobile device. Those guidelines are consistent with safety standards previously set by both U.S. and international standards bodies: American National Standard Institute (ANSI), National Council of Radiation Protection and Measurements (NCRP), and International Commission on Non-Ionizing Radiation Protection (ICNRP). Those standards were based on comprehensive and periodic

This document is the sole and exclusive property of WAVECOM. Not to be distributed or divulged without prior written agreement.
Ce document est la propriété exclusive de WAVECOM. Il ne peut être communiqué ou divulgué à des tiers sans son autorisation préalable.

evaluations of the relevant scientific literature. The design of your Module complies with the FCC guidelines and applicable

WARNING: Unauthorized antennas, modifications, or attachments could impair call quality, damage the Module, or result in violation of FCC regulations. Do not use the Module with a damaged antenna. Please contact your local authorized dealer for antenna replacement.

Important!

Read these safety guidelines prior to using your Module. Failure to follow these rules and guidelines may be dangerous and/or illegal.

4.3.3.1 Road Safety Information

Do not use a hand-held Module while driving a vehicle. Talking on the Module while driving is dangerous and illegal in some locations. If using a hand-held Module, park the vehicle before conversing. Remember – road safety *always* comes first!

4.3.3.2 Aircraft Safety Information

Power down your Module prior to boarding an aircraft. Sending and receiving calls on your Module on an aircraft is prohibited by law and aviation regulations. Using a wireless Module in an aircraft may interfere with aircraft radio communication or navigation equipment, and disrupt the wireless Module network. When boarding an aircraft, turn your Module OFF.

4.3.3.3 Hospital & Medical Safety Information

Power down your Module prior to entering hospitals, health care facilities, or when near medical equipment.

Operating any radio transmitting equipment, including digital wireless Modules, may interfere with RF-sensitive medical devices. Follow all posted regulations while in hospitals and health care facilities regarding the use of your Module.

4.3.3.4 Blasting and Refueling Safety Information

Do not use your Module near a blasting site. Power down your Module when in any area with a potentially explosive

Atmosphere. Radio transmissions in such areas could cause an explosion or fire, resulting in bodily injury or even death. Obey all posted signs and instructions regarding the use of wireless Module usage. Observe restrictions on the use of radio equipment in fuel depots (fuel storage and distribution areas), chemical plants or where blasting operations are in progress.

4.3.3.5 Interference Safety Information

All mobile Modules are subject to radio frequency interference that may affect the performance of your

Module. Your digital wireless Module is a low power radio transmitter and receiver. The design of your Module complies with the FCC guidelines and applicable standards. Never rely solely on your Module for essential communications (e.g., medical emergencies). You must be in a service area with adequate signal

This document is the sole and exclusive property of WAVECOM. Not to be distributed or divulged without prior written agreement.
Ce document est la propriété exclusive de WAVECOM. Il ne peut être communiqué ou divulgué à des tiers sans son autorisation préalable.

strength to use the Module. Emergency calls may not be possible on all wireless Module networks or when certain network services and/or Module features are in use. Check with your local service provider(s).

4.3.3.6 Service Safety Information

Only qualified service personnel are authorized to repair your digital wireless Module and equipment. Use only approved accessories. Contact you sales representative authorized service centers.

FCC RF EXPOSURE INFORMATION

In August 1996 the Federal Communications Commission (FCC) of the United States with its action in Report and Order FCC 96-326 adopted an updated safety standard for human exposure to radio frequency electromagnetic energy emitted by FCC regulated transmitters. Those guidelines are consistent with the safety standard previously set by both U.S. and international standards bodies. The design of this phone complies with the FCC guidelines and these international standards.

For more information about RF exposure, please visit the FCC website at www.fcc.gov

This document is the sole and exclusive property of WAVECOM. Not to be distributed or divulged without prior written agreement.
Ce document est la propriété exclusive de WAVECOM. Il ne peut être communiqué ou divulgué à des tiers sans son autorisation préalable.

4.4 General Purpose Connector data sheet

The next 6 pages are the KYOCERA/ELCO data sheets for the GPC (also available from http://www.avxcorp.com .

This document is the sole and exclusive property of WAVECOM. Not to be distributed or divulged without prior written agreement.
Ce document est la propriété exclusive de WAVECOM. Il ne peut être communiqué ou divulgué à des tiers sans son autorisation préalable.

AVX 1/6

This document is the sole and exclusive property of WAVECOM. Not to be distributed or divulged without prior written agreement.
Ce document est la propriété exclusive de WAVECOM. Il ne peut être communiqué ou divulgué à des tiers sans son autorisation préalable.

AVX 2/6

This document is the sole and exclusive property of WAVECOM. Not to be distributed or divulged without prior written agreement.
Ce document est la propriété exclusive de WAVECOM. Il ne peut être communiqué ou divulgué à des tiers sans son autorisation préalable.

AVX 3/6

This document is the sole and exclusive property of WAVECOM. Not to be distributed or divulged without prior written agreement.
Ce document est la propriété exclusive de WAVECOM. Il ne peut être communiqué ou divulgué à des tiers sans son autorisation préalable.

AVX 4/6

This document is the sole and exclusive property of WAVECOM. Not to be distributed or divulged without prior written agreement.
Ce document est la propriété exclusive de WAVECOM. Il ne peut être communiqué ou divulgué à des tiers sans son autorisation préalable.

AVX 5/6

This document is the sole and exclusive property of WAVECOM. Not to be distributed or divulged without prior written agreement.
Ce document est la propriété exclusive de WAVECOM. Il ne peut être communiqué ou divulgué à des tiers sans son autorisation préalable.

AVX 6/6

This document is the sole and exclusive property of WAVECOM. Not to be distributed or divulged without prior written agreement.
Ce document est la propriété exclusive de WAVECOM. Il ne peut être communiqué ou divulgué à des tiers sans son autorisation préalable.