REVISION RECORD			
LTR	ECO NO:	APPROVED:	DATE:

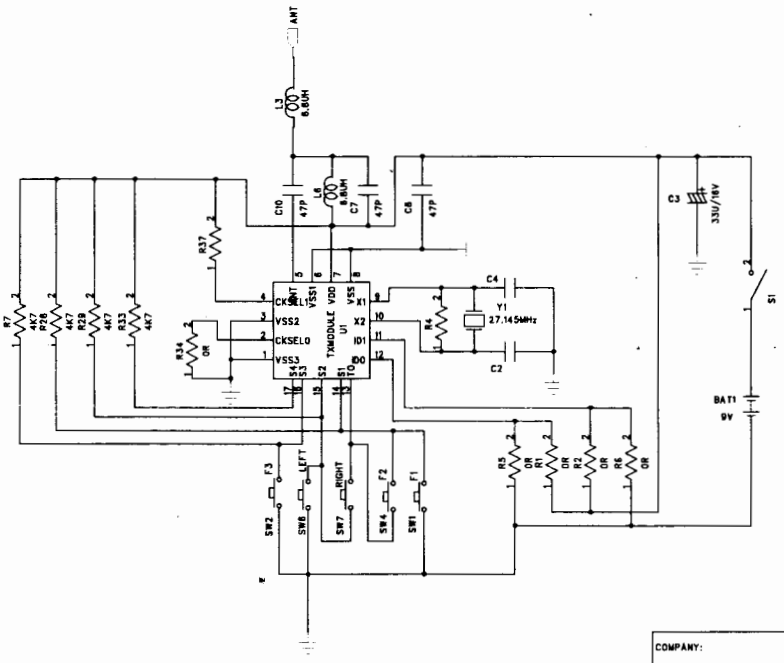

DRAWN:	DATED:	COMPANY: TOPCO	
CHECKED:	DATED:	TITLE: TRANSMITTER	
QUALITY CONTROL:	DATED:	CODE: / SIZE: / DRAWING NO: XIAXIONGXIE	REV:
RELEASED:	DATED:	SCALE: NO	SHEET: 1 OF 2