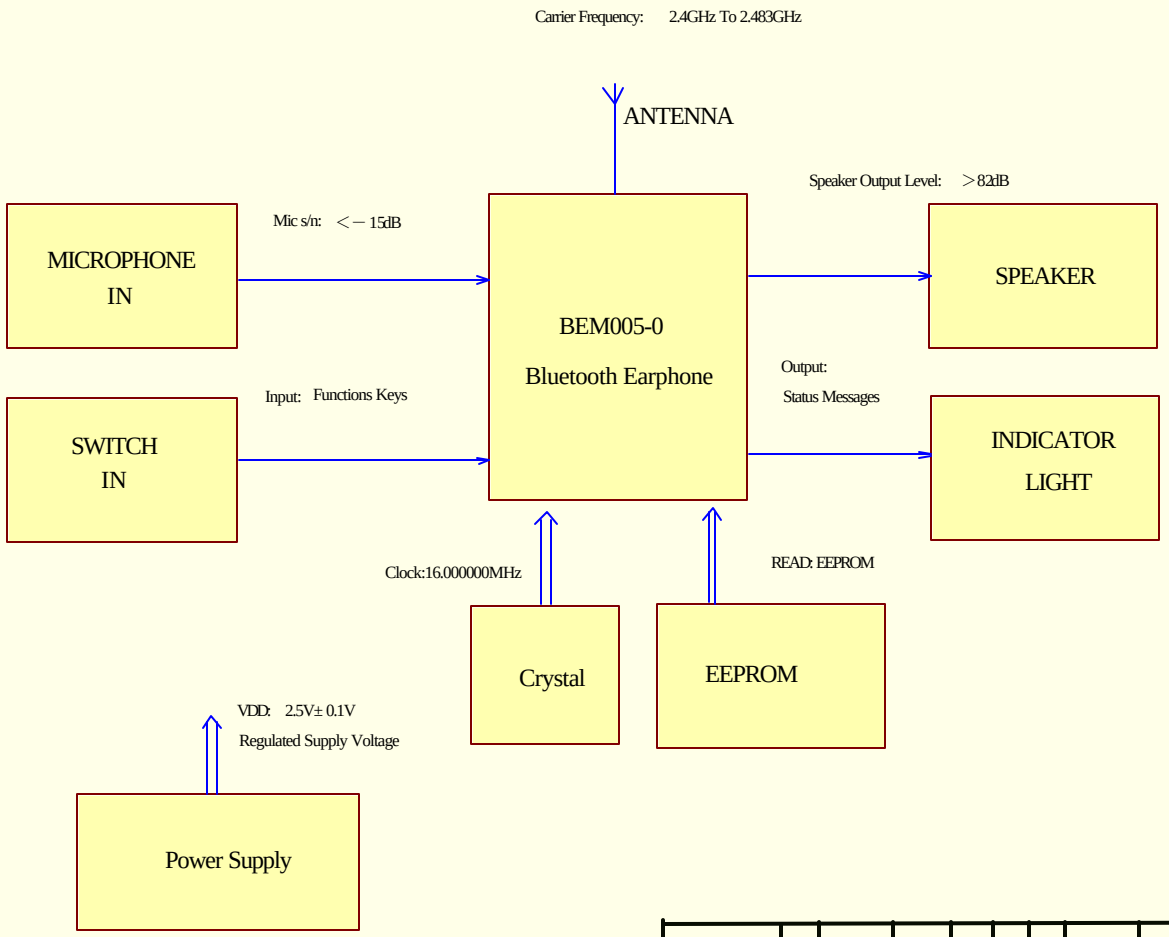

Medium serial number			
Total number in diagram in bottom			
Signature	Data		

Intend to make:	yituo Huang 05/04/06	SBT-2008 Bluetooth Earphone	HDL000013
Examine:	hui Tan 05/04/06		Page 2/ totally 4page
Standardize:	chunmin Yang 05/04/06		SCUD(FU JIAN)CK,LTD
Approval:	hua qing Zhang 05/04/06		

Format :A3 Edition : V1.0