Keyboard
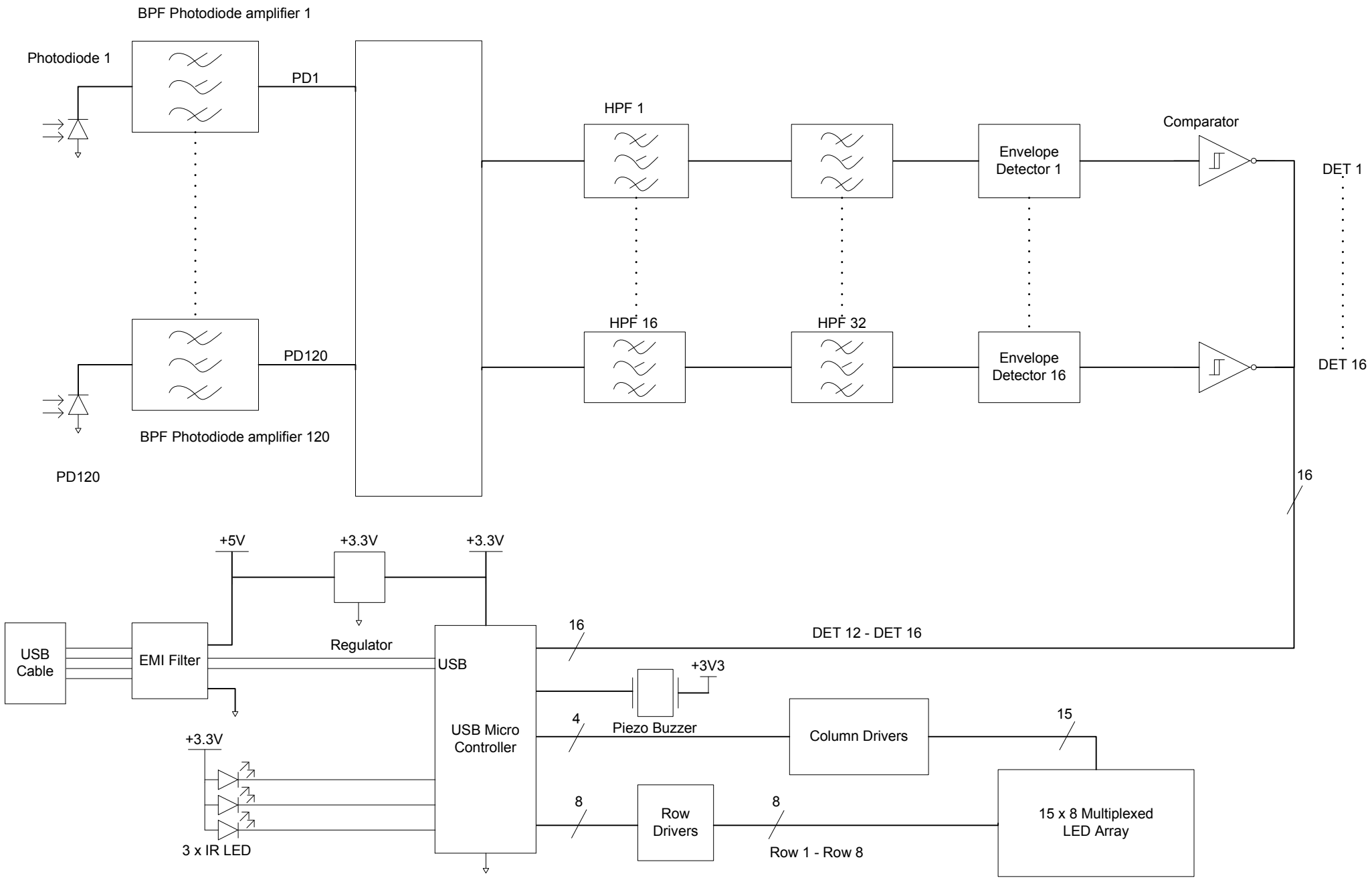
Lomak International LImited