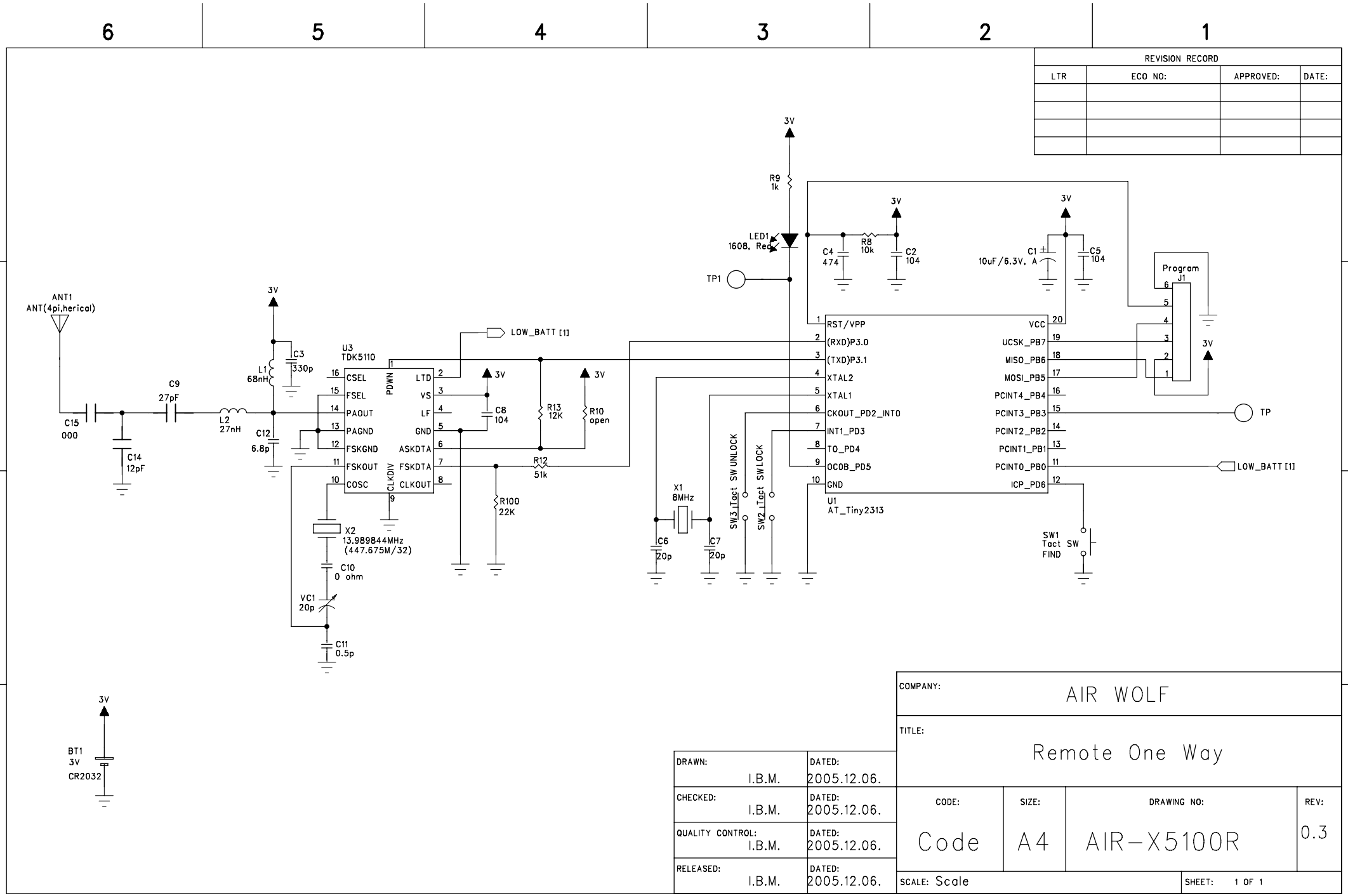

REVISION RECORD			
LTR	ECO NO:	APPROVED:	DATE:

DRAWN: I.B.M.	DATED: 2005.12.06.		
CHECKED: I.B.M.	DATED: 2005.12.06.		
QUALITY CONTROL: I.B.M.	DATED: 2005.12.06.		
RELEASED: I.B.M.	DATED: 2005.12.06.		

COMPANY: AIR WOLF

TITLE: Remote One Way

CODE:	SIZE:	DRAWING NO:	REV:
Code	A4	AIR-X5100R	0.3

SCALE: Scale

SHEET: 1 OF 1