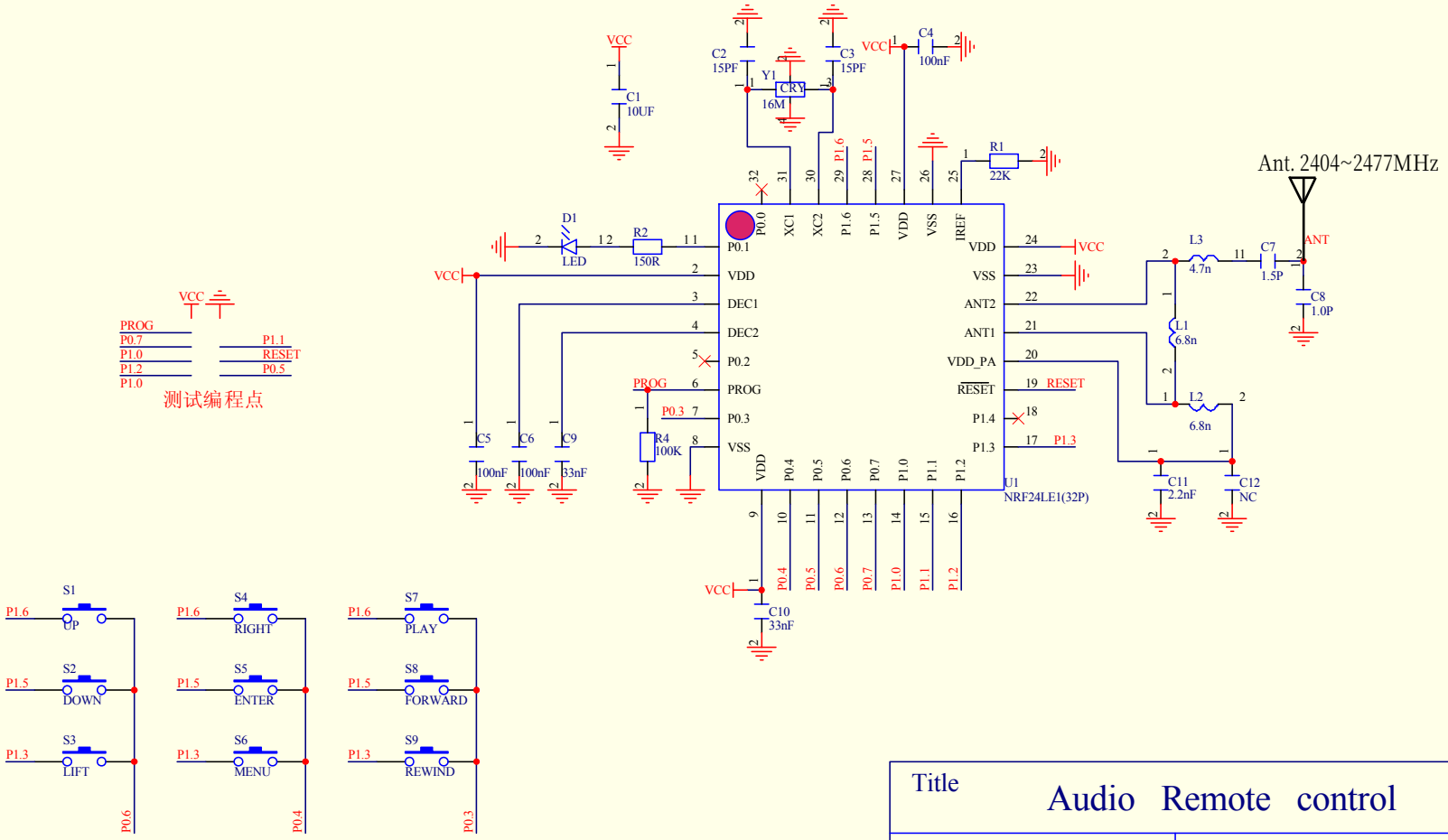

Title	Audio Remote control	
Mode No: RF064A_TX		Revision: 1.1
Date: 9-Nov-2010		Drawn By: DuanShouYong