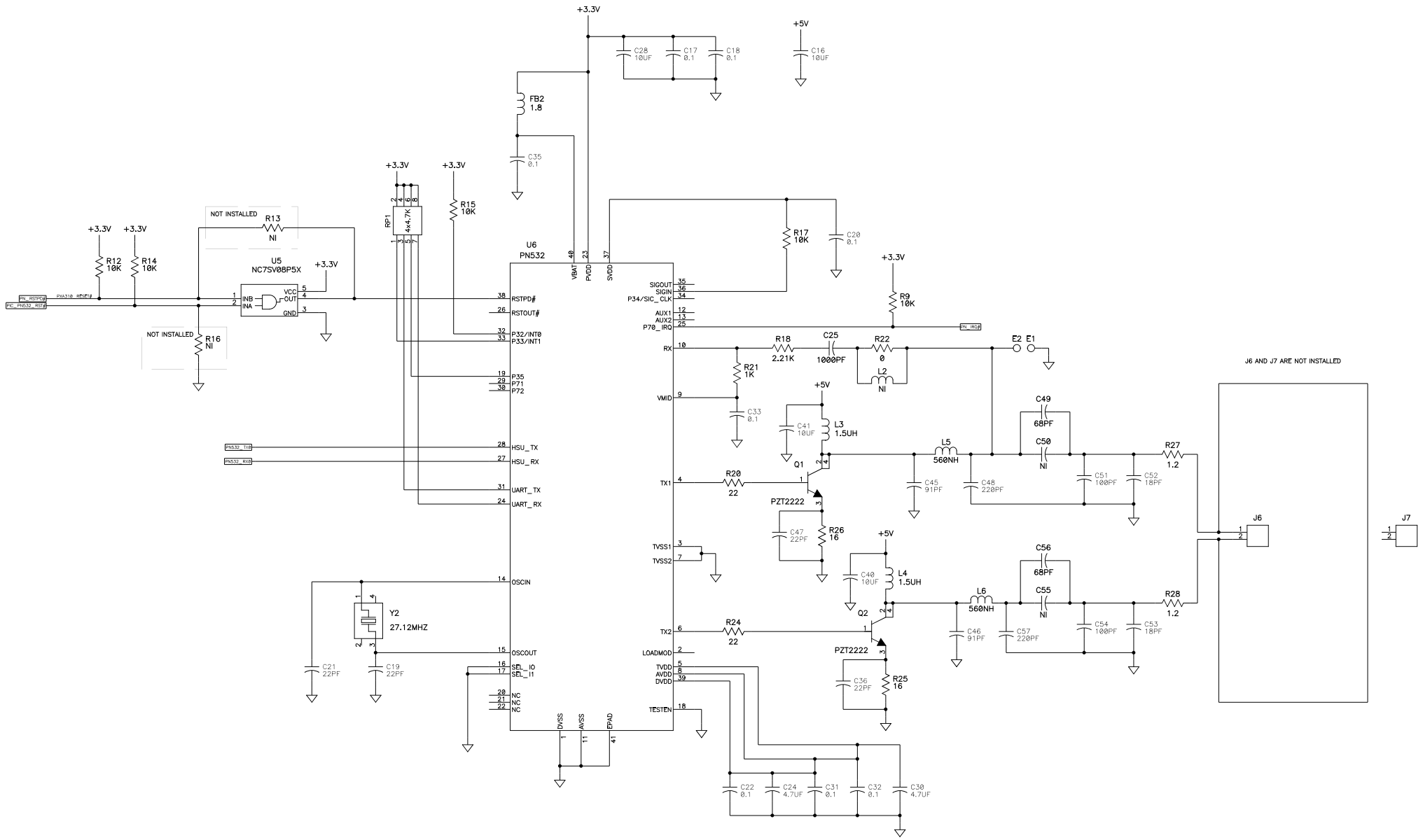

Blackboard Inc. Phoenix, Arizona		
PRODUCT: VR4100		(PG 2)
PART: VR4100 LCD PWA (SEIKO)		
PART NO: 051-700-250	REV: C	
SCH FILE: T051700250A.SCH		
DATE: 5-23-2011		
CHANGE ORDER: ECO10010		
DESIGN BY: TLK	DWG BY: TLK	

PROPRIETARY – FOR INTERNAL USE ONLY