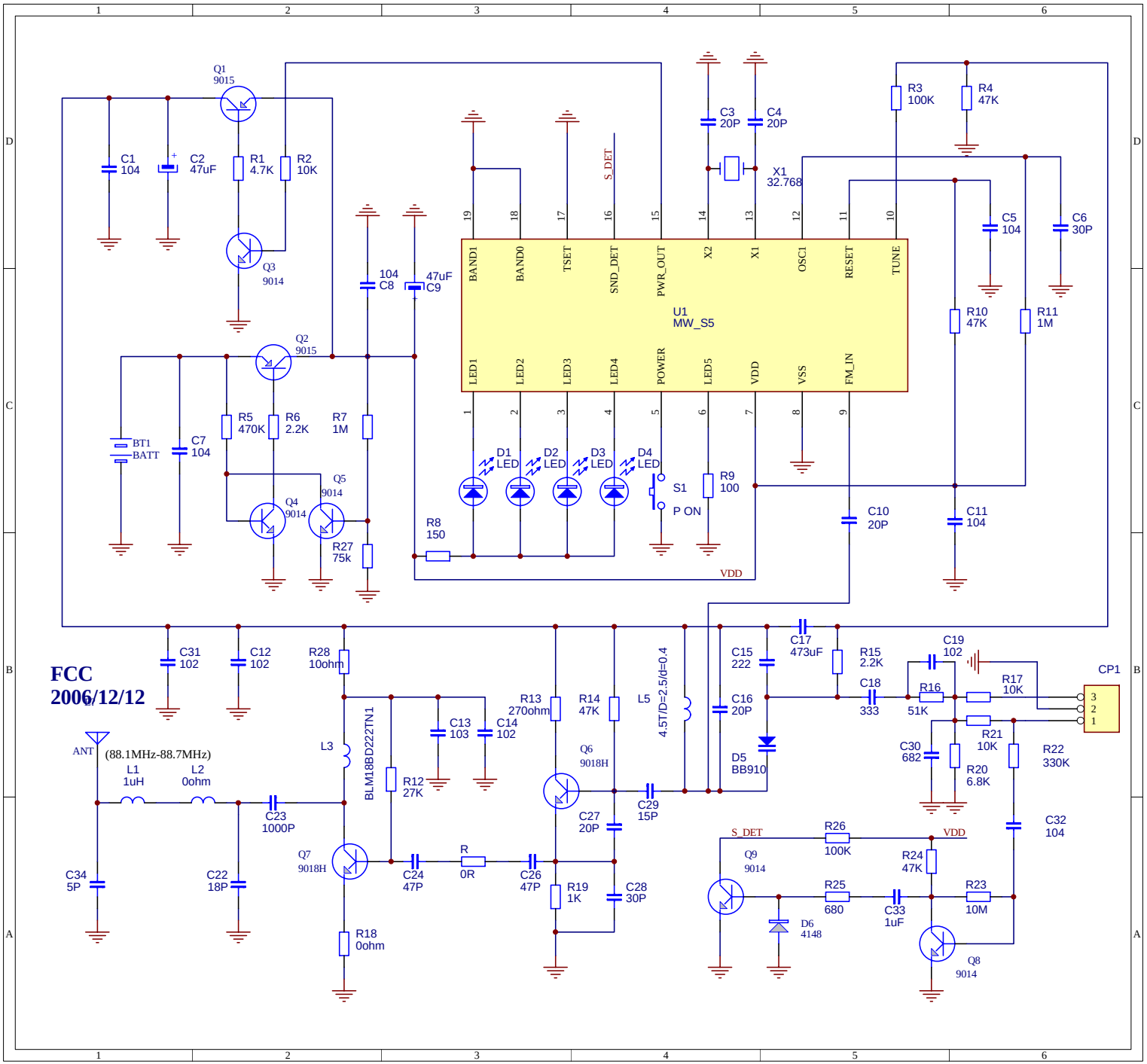
FCC
2006/12/12
Q1
9015
C1
104
C2
47uF
R1
4.7K
R2
10K
Q3
9014
104
C8
47uF
C9
Q2
9015
BT1
BATT
C7
104
R5
470K
R6
2.2K
R7
1M
Q4
9014
Q5
9014
R27
75k
R8
150
BAND1
BAND0
TSET
SND_DET
PWR_OUT
X2
X1
OSC1
RESET
TUNE
U1
MW_S5
LED1
LED2
LED3
LED4
POWER
LED5
VDD
VSS
FM_IN
S_DET
C3
20P
C4
20P
X1
32.768
R3
100K
R4
47K
C5
104
C6
30P
R10
47K
R11
1M
D1
LED
D2
LED
D3
LED
D4
LED
S1
P ON
R9
100
C10
20P
C11
104
VDD
C31
102
C12
102
R28
10ohm
ANT
(88.1MHz-88.7MHz)
L1
1uH
L2
0ohm
C23
1000P
C34
5P
C22
18P
L3
BLM18BD222TN1
R12
27K
C13
103
C14
102
Q7
9018H
C24
47P
R
0R
C26
47P
R18
0ohm
R13
270ohm
R14
47K
Q6
9018H
R19
1K
C27
20P
C28
30P
L5
4.5T/D=2.5/d=0.4
C29
15P
C15
222
C16
20P
D5
BB910
C17
473uF
R15
2.2K
C18
333
C19
102
R16
51K
R17
10K
R21
10K
R20
6.8K
C30
682
R22
330K
CP1
3
2
1
C32
104
S_DET
Q9
9014
R26
100K
VDD
R24
47K
R25
680
D6
4148
C33
1uF
R23
10M
Q8
9014