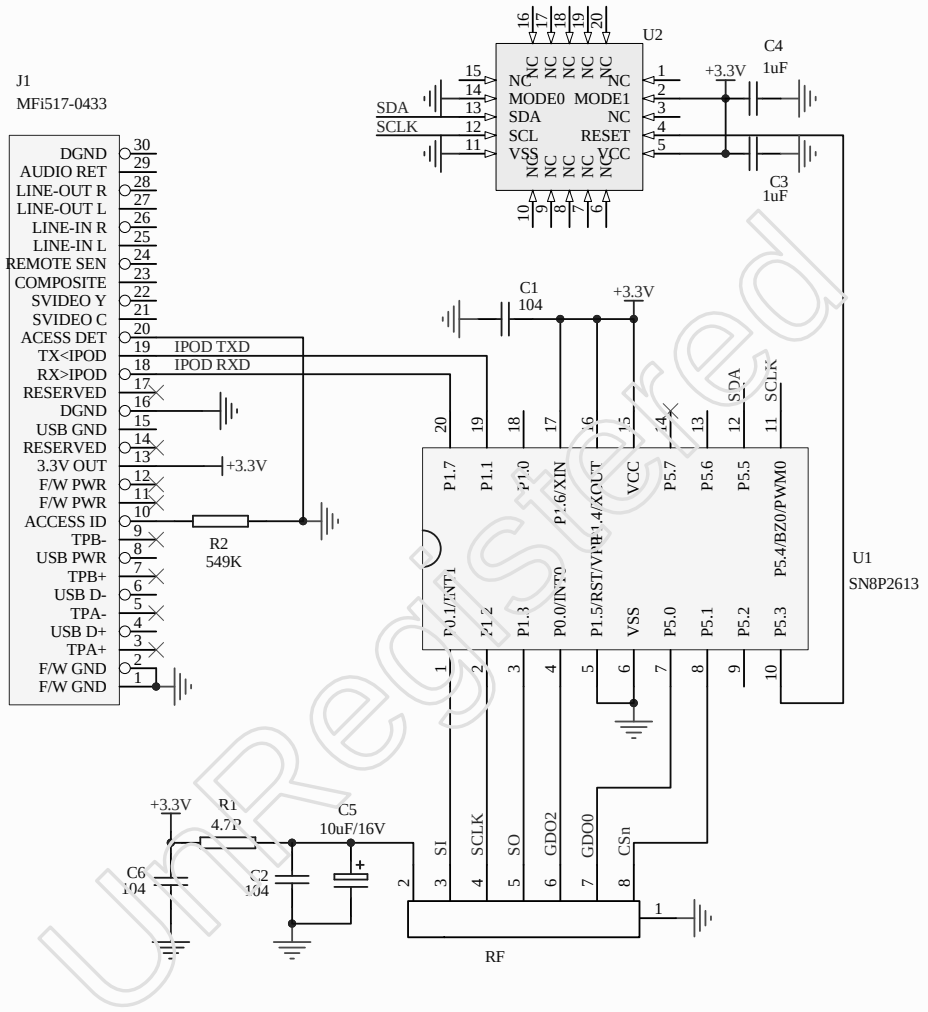

Title	DXA014B
Company Name	TELEWAY INDUSTRIAL LTD
Designed by	li tao
Approved by	david
Version	V01
Date	2011-06-11

UnRegistered