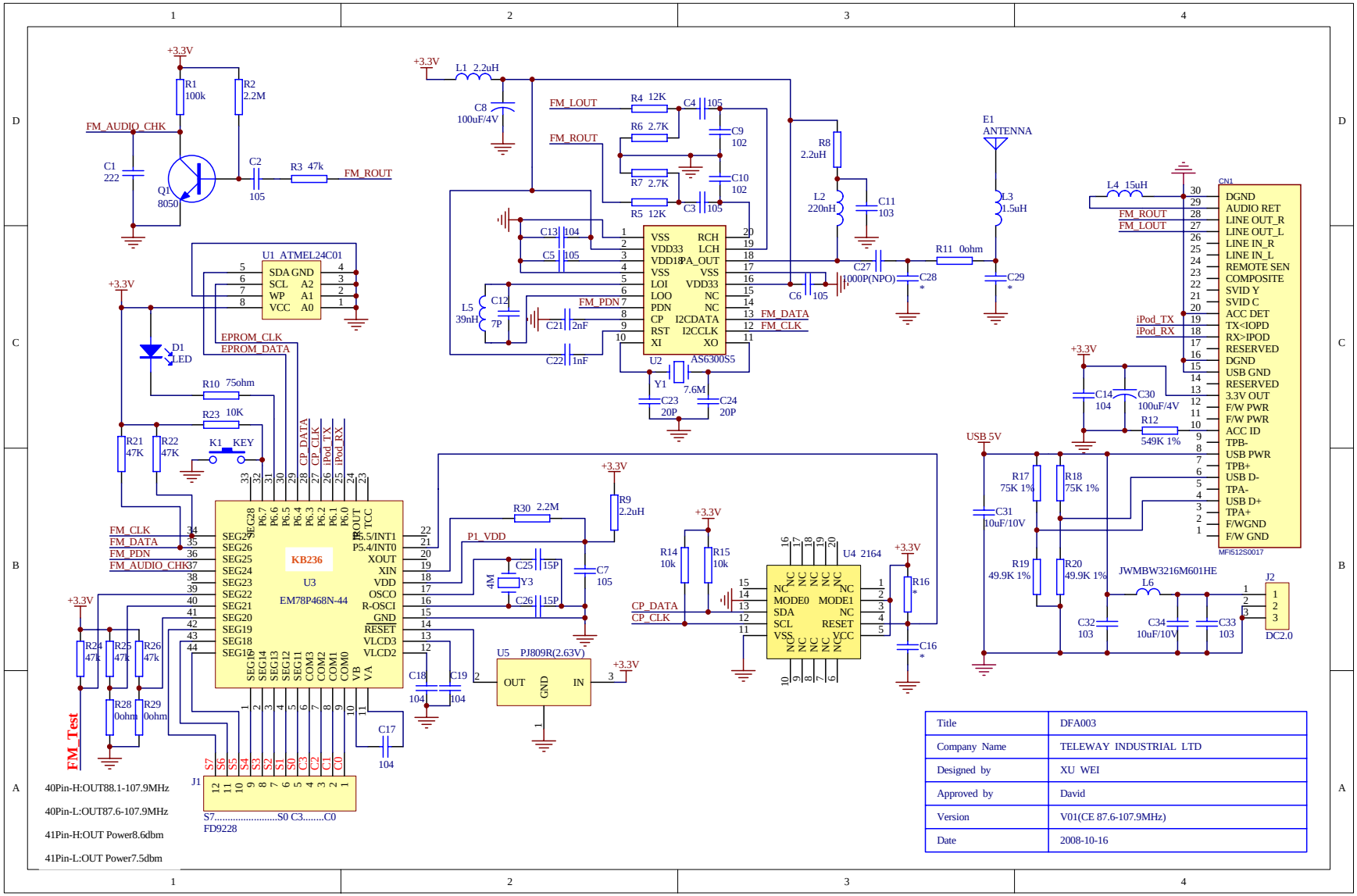

Title	DFA003
Company Name	TELEWAY INDUSTRIAL LTD
Designed by	XU WEI
Approved by	David
Version	V01(CE 87.6-107.9MHz)
Date	2008-10-16