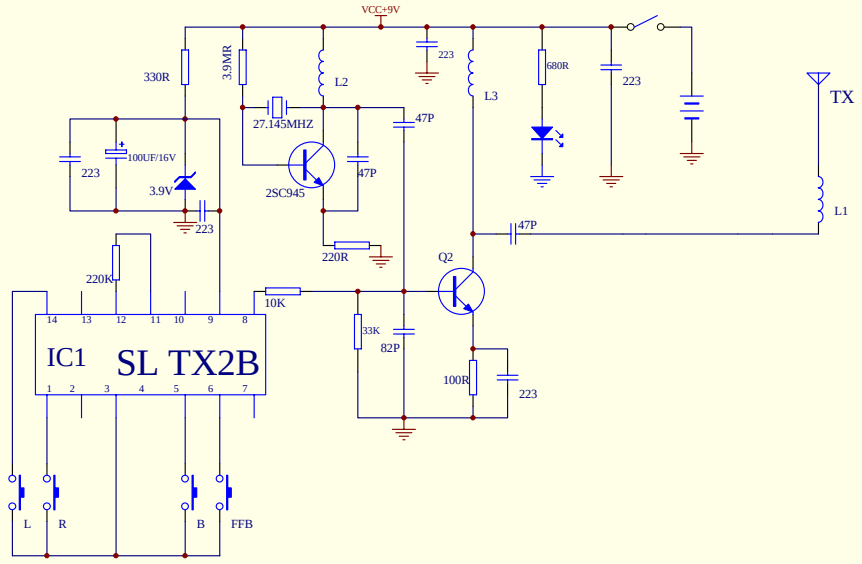

Title	JINWEI INDUSTRIAL, CO.,LTD	
Size B	Number 1:24 27MHZ SCHEMATIC DRAWING	Revision 1.0
Date: 20-Oct-2005	Sheet of	
File: E:\pcb\FCC\[illegible]GK-76FCC\GK-768AS.DDB	Drawn By:	