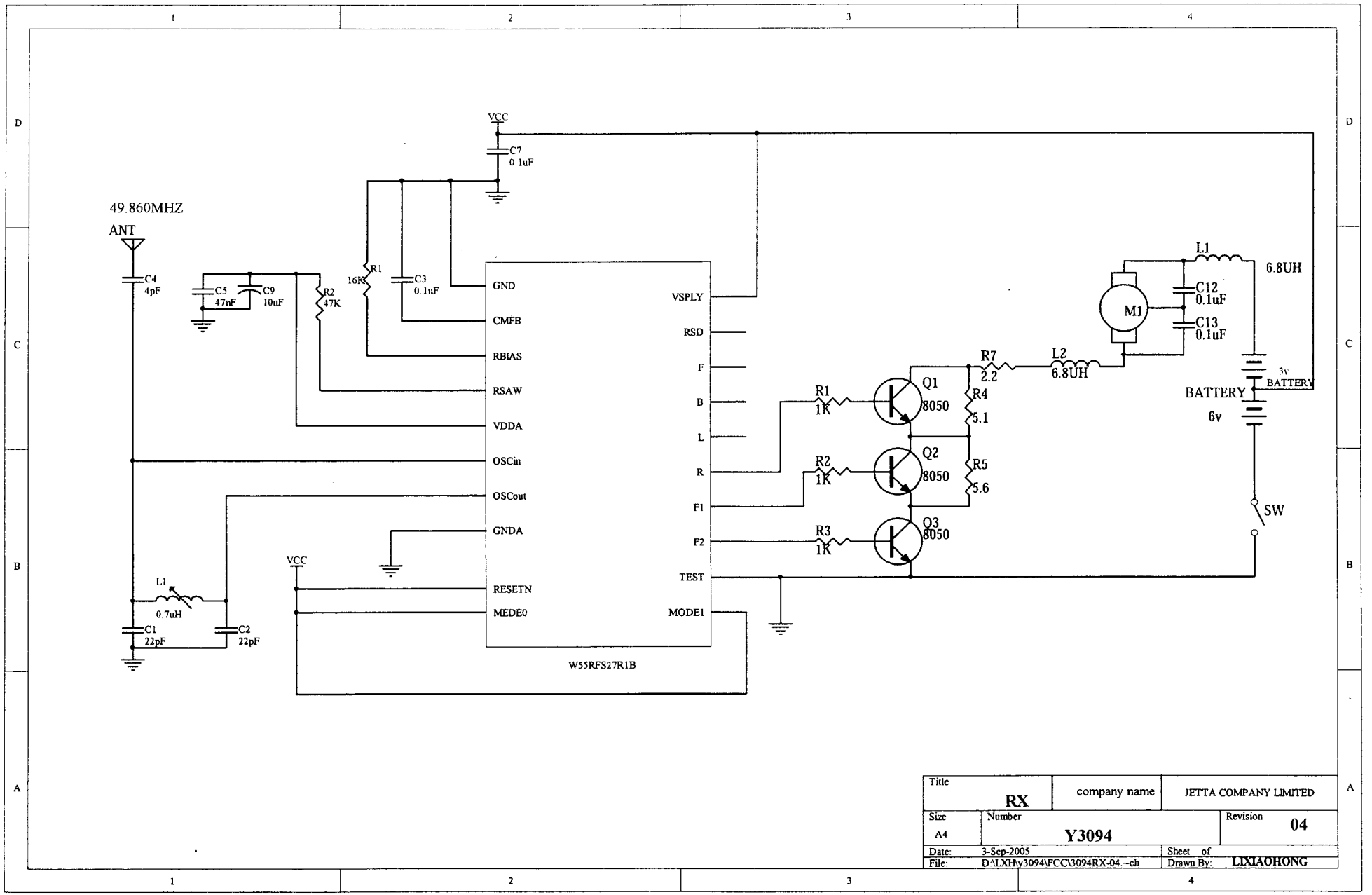
VCC
C7
0.1uF
49.860MHZ
ANT
C4
4pF
C5
47nF
C9
10uF
R2
47K
R1
16K
C3
0.1uF
GND
CMFB
RBIAS
RSAW
VDDA
OSCin
OSCout
GNDA
RESETN
MEDE0
VSPLY
RSD
F
B
L
R
F1
F2
TEST
MODE1
W55RFS27R1B
L1
0.7uH
C1
22pF
C2
22pF
VCC
R1
1K
R2
1K
R3
1K
Q1
8050
Q2
8050
Q3
8050
R4
5.1
R5
5.6
R7
2.2
L2
6.8UH
M1
C12
0.1uF
C13
0.1uF
L1
6.8UH
3v
BATTERY
BATTERY
6v
SW
Title
RX
company name
JETTA COMPANY LIMITED
Size
A4
Number
Y3094
Revision
04
Date:
3-Sep-2005
Sheet of
File:
D:\LXH\y3094\FCC\3094RX-04.~ch
Drawn By:
LIXIAOHONG