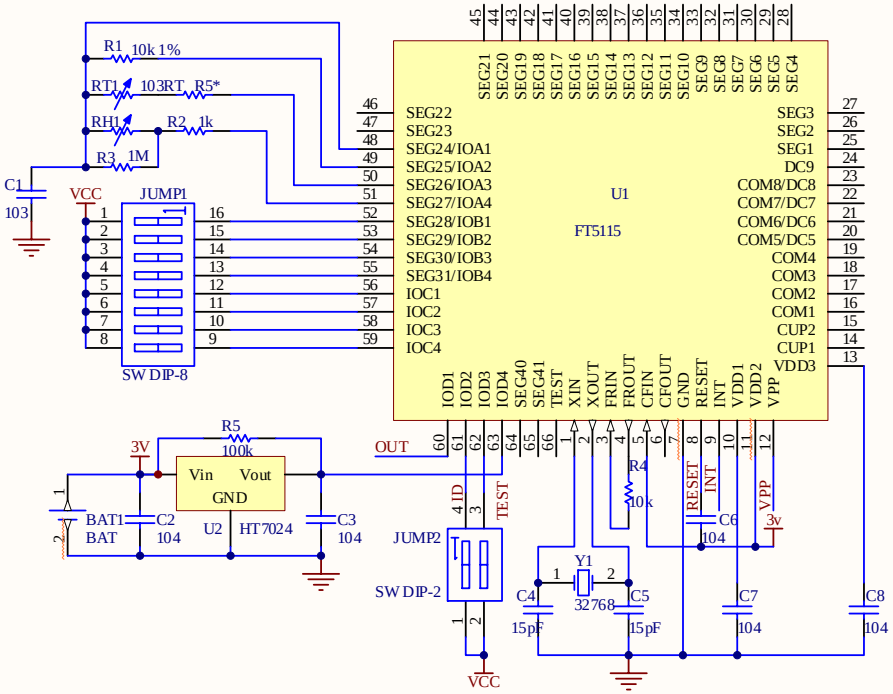

CompanyName: FLYTOP	
Title: WirelessSendControl	Revision: V1.0
DrawBy: Hu	ModifiedDate: 2005-12-16

FLYTOP