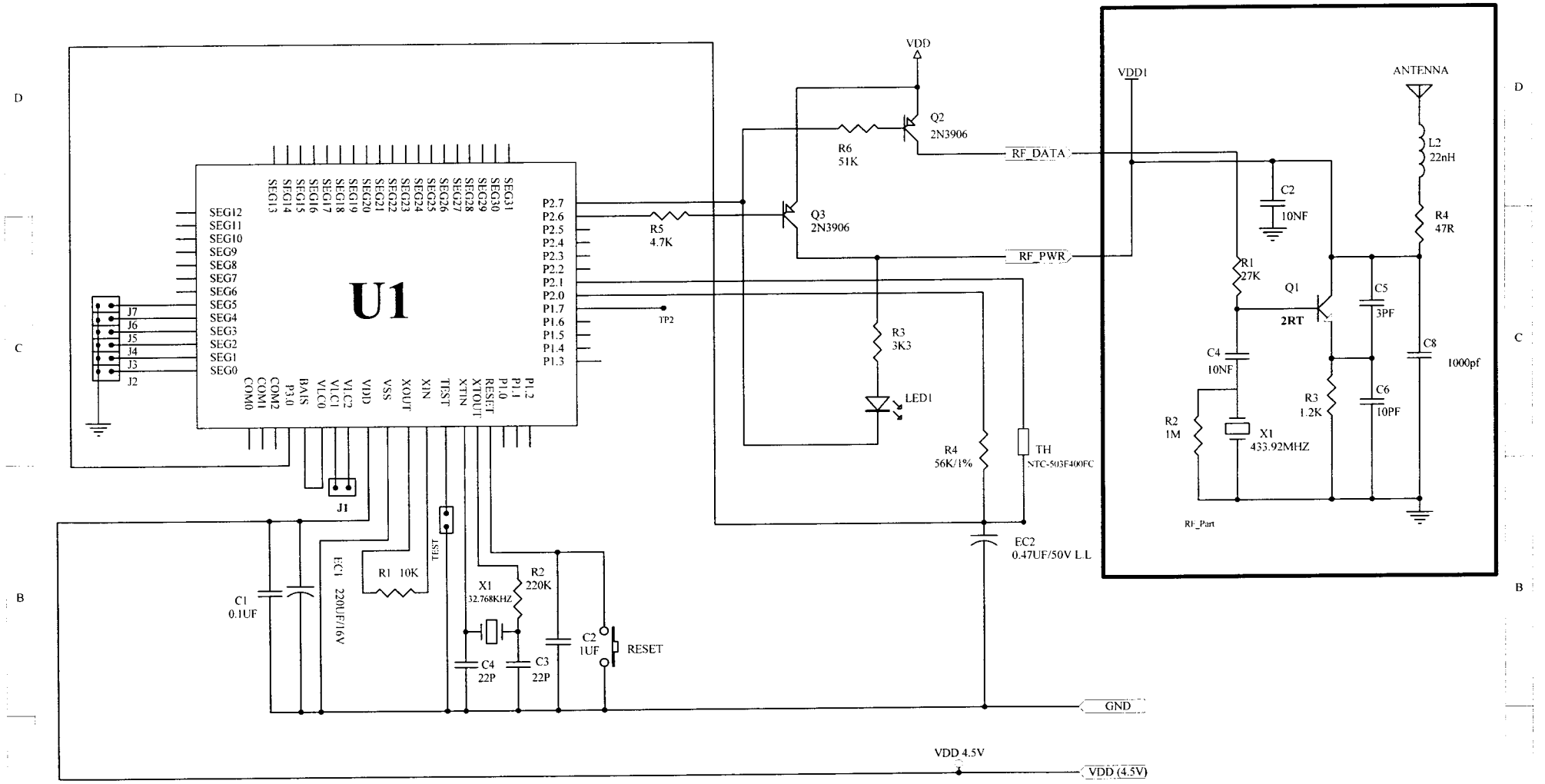

Title		
Size A4	Number	Revision
	TX6120T	
Date: 13-Oct-2005		Sheet of
File: C:\DOCUME~1\..\TX6120T.SCH		Drawn By: