REVISIONS				
ZONE	REV.	DESCRIPTION	DWN	APPROVED
		SEE SHEET 1		

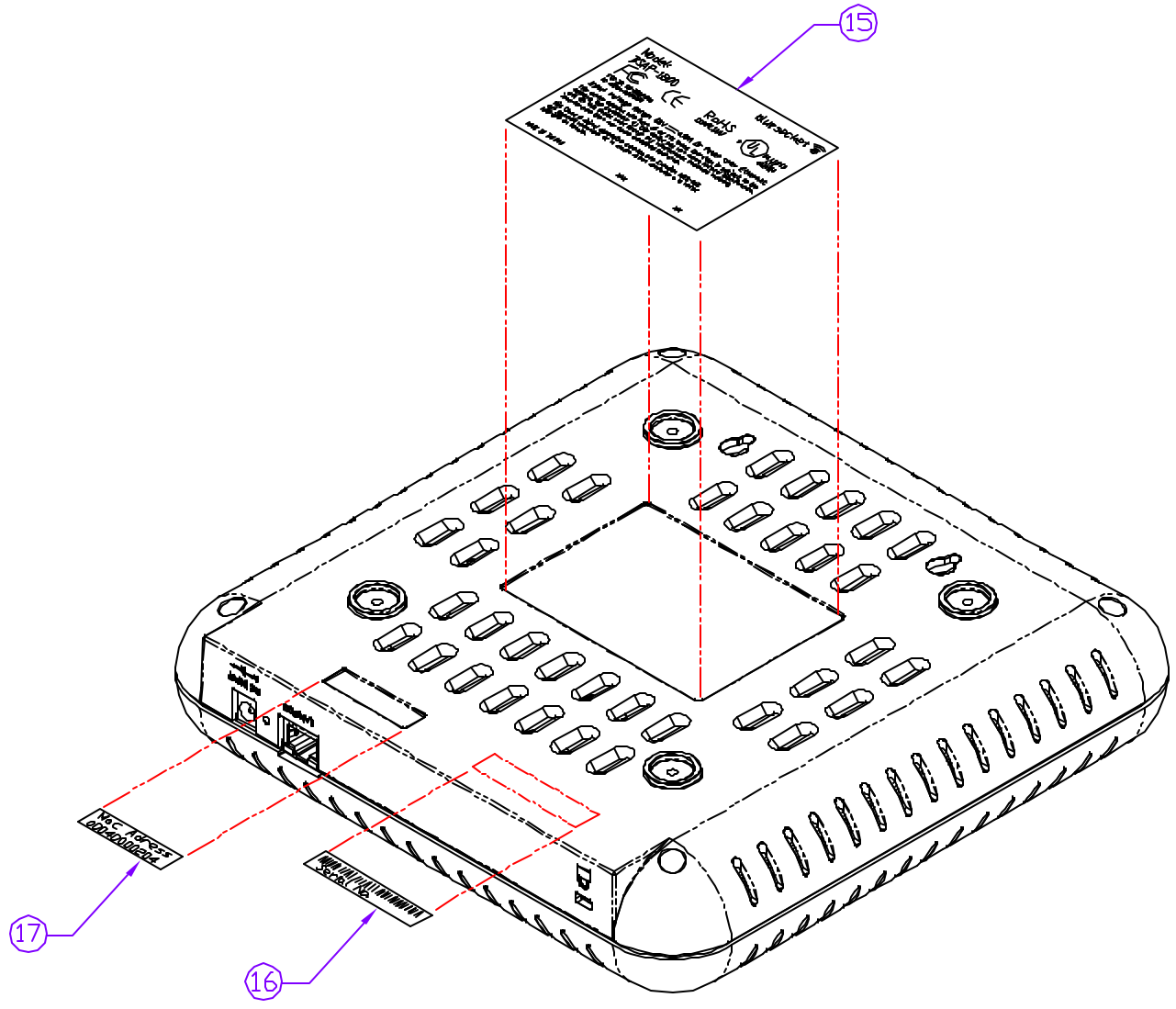

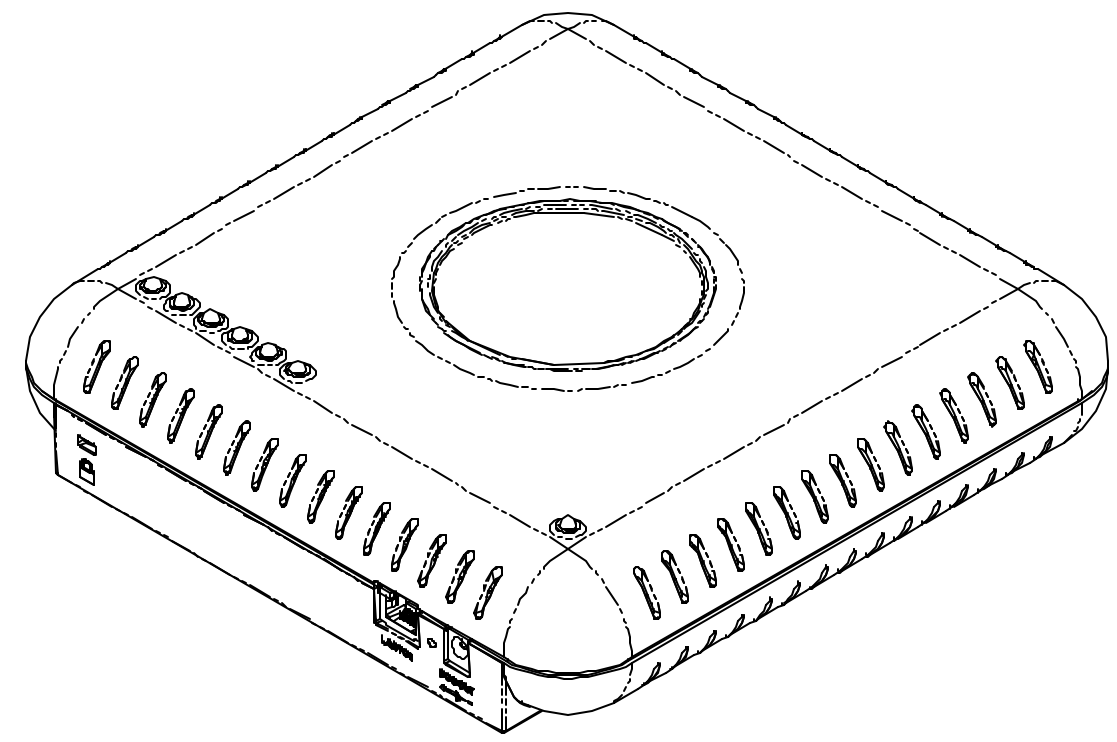

COMPLETED BSAP-1800

STEP 10:

PLACE ADHESIVE BACKED PRESSURE SENSATIVE PRODUCT/AGENCY LABEL (15) INTO INDENT PROVIDED ON BOTTOM OF CASE. PLACE ADHESIVE BACKED PRESSURE SENSATIVE BARCODE LABEL (16) APPROXIMATELY WHERE SHOWN ABOVE. PLACE ADHESIVE BACKED PRESSSURE SENSATIVE MAC ADDRESS LABEL (17) INTO INDENT PROVIDED IN BOTTOM OF PLASTIC CASE.

REFER TO BLUESOCKET PRODUCT LABELING SPEC FOR THE MOST RECENT LABEL DESCRIPTIONS AND LAYOUT GUIDES.

PROPRIETARY AND CONFIDENTIAL
THE INFORMATION CONTAINED IN THIS DRAWING IS THE SOLE PROPERTY OF BLUESOCKET. ANY REPRODUCTION IN PART OR AS A WHOLE WITHOUT THE WRITTEN PERMISSION OF BLUESOCKET IS PROHIBITED.

NEXT ASSY | USED ON
APPLICATION

UNLESS OTHERWISE SPECIFIED:
DIMENSIONS ARE IN INCHES
TOLERANCES:
FRACTIONAL ±
ANGULAR: MACH ± BEND ±
TWO PLACE DECIMAL ±
THREE PLACE DECIMAL ±
INTERPRET DIMENSIONS ACCORDING TO:
MATERIAL —
FINISH —
DO NOT SCALE DRAWING

	DATE	INIT.
DRAWN	05/21/07	EDW
CHECKED		
ENG APPR.		
MFG APPR.		
QA		

COMMENTS:

bluesocket

TITLE: ASSEMBLY DRAWING
BSAP-1800 SYSTEM LEVEL

SIZE	DWG. NO.	REV
D	870-01B00-D00	000

SCALE: NONE | WEIGHT: | SHEET 7 OF 7