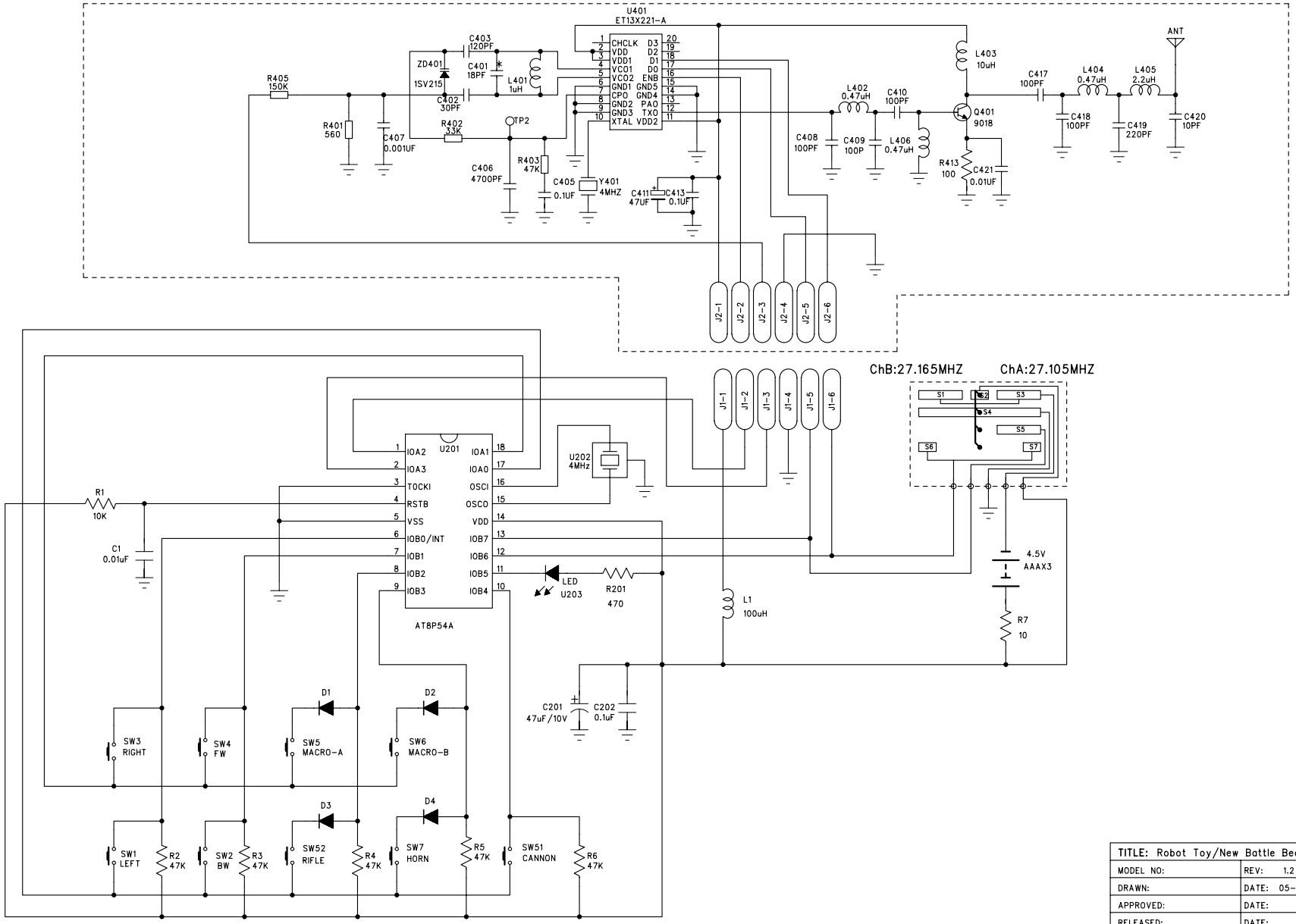


| | | |
|---|---|---|
| TITLE: Robot Toy/New Battle Beasts | | |
| MODEL NO: | | REV: 1.2 |
| DRAWN: | | DATE: 05-8-2 |
| APPROVED: | | DATE: |
| RELEASED: | | DATE: |
| | SIZE: A4 | SHEET: 1 OF 1 |
| CANSUM ELECTRONICS CO.LTD | | |