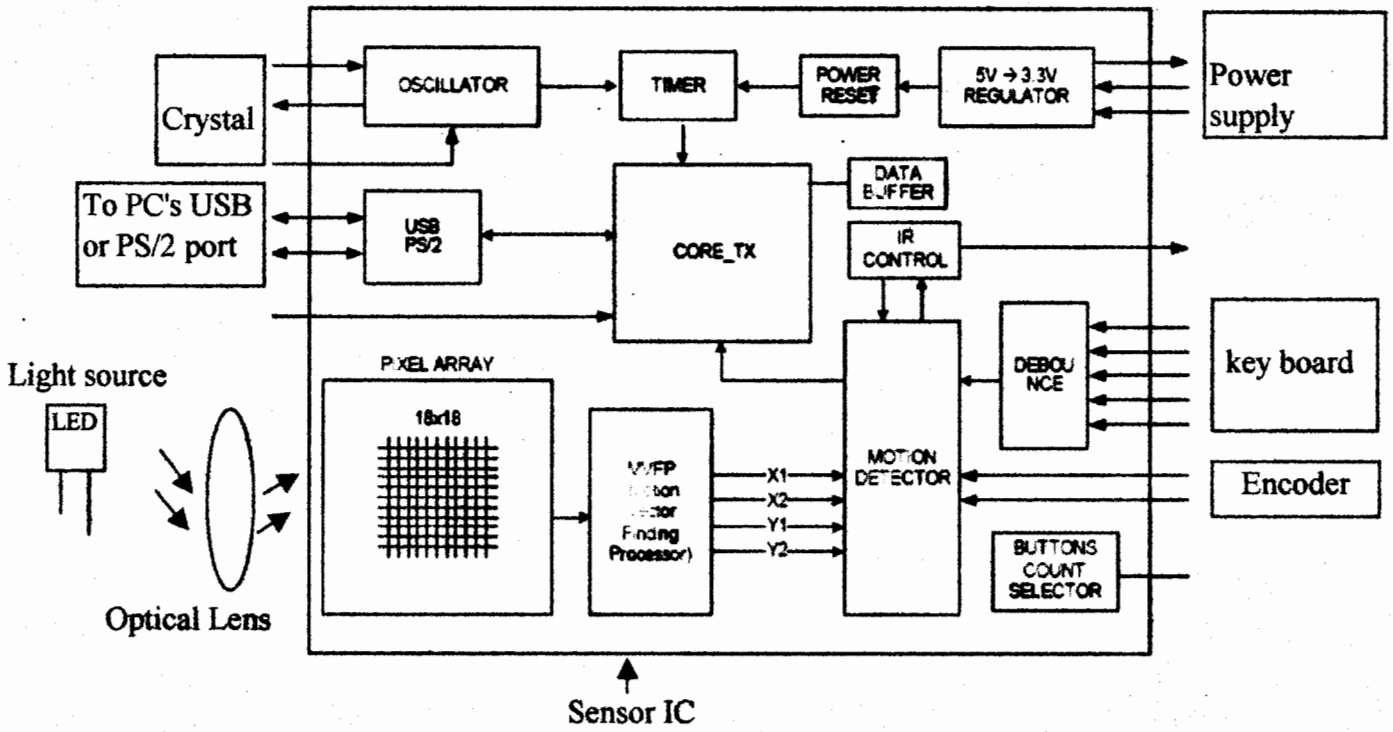Block Diagram For Mouse QN-M8099