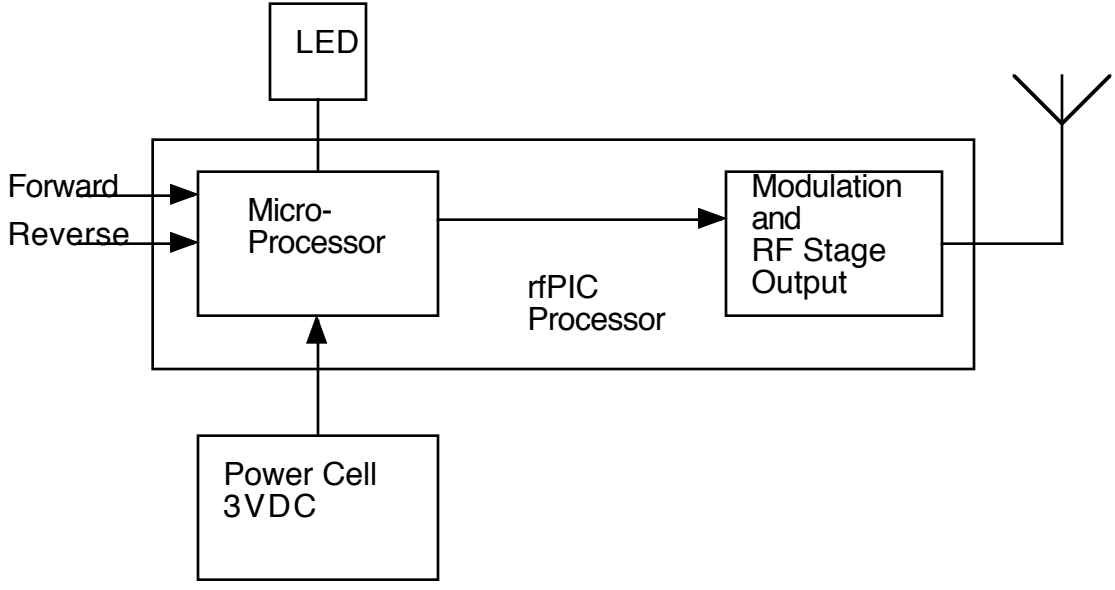1.4 General Block Diagram