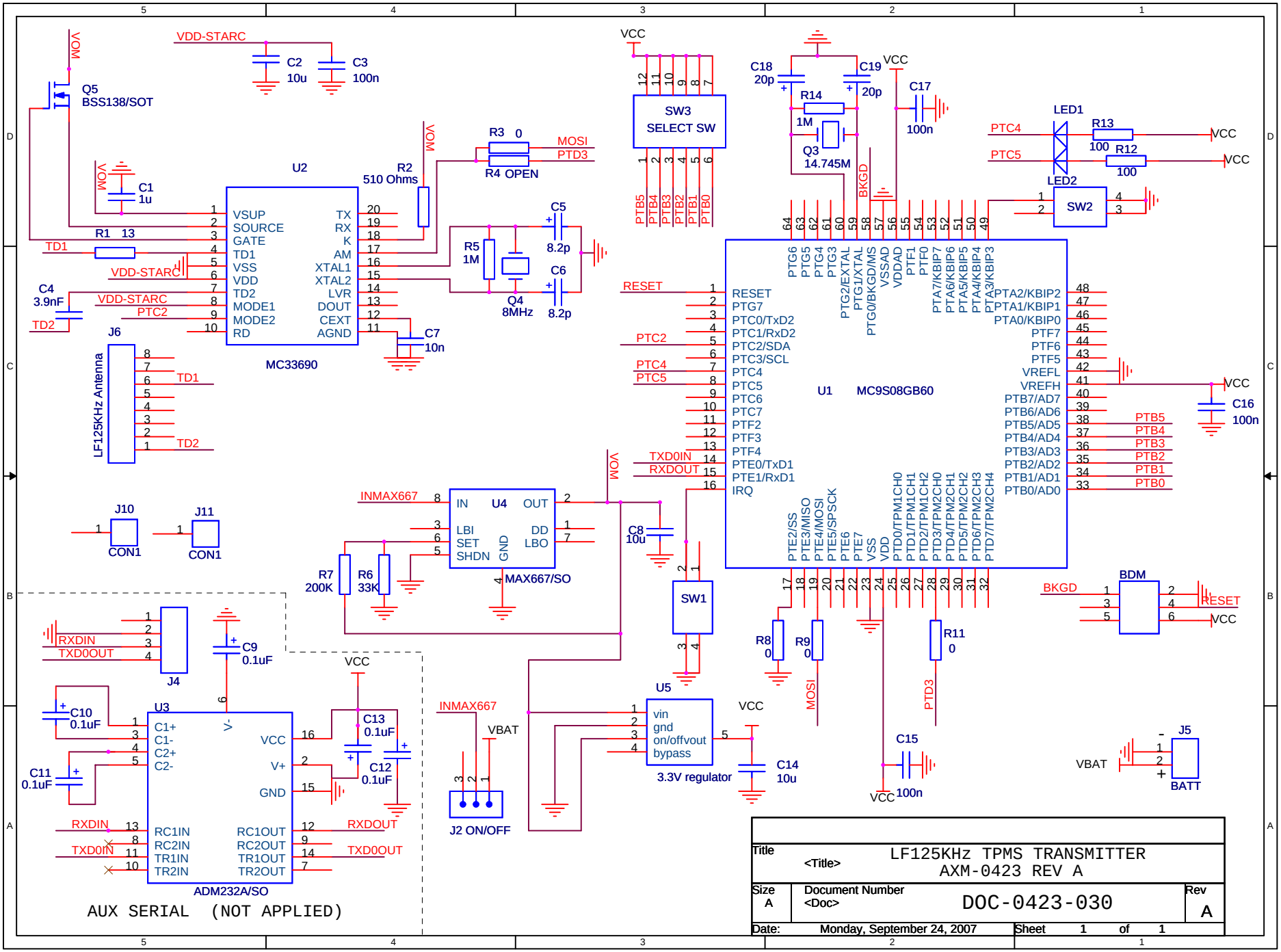
VDD-STARC
C2 10u
C3 100n
VOM
Q5 BSS138/SOT
C1 1u
R1 13
TD1
VDD-STARC
C4 3.9nF
VDD-STARC
PTC2
TD2
J6
LF125KHz Antenna
U2
MC33690
VSUP
SOURCE
GATE
TD1
VSS
VDD
TD2
MODE1
MODE2
RD
TX
RX
K
AM
XTAL1
XTAL2
LVR
DOUT
CEXT
AGND
R2 510 Ohms
C7 10n
R3 0
R4 OPEN
MOSI
PTD3
R5 1M
Q4 8MHz
C5 8.2p
C6 8.2p
VCC
SW3 SELECT SW
PTB5
PTB4
PTB3
PTB2
PTB1
PTB0
C18 20p
C19 20p
R14 1M
Q3 14.745M
C17 100n
BKGD
LED1
R13 100
R12 100
PTC4
PTC5
LED2
SW2
U1
MC9S08GB60
RESET
PTG7
PTC0/TxD2
PTC1/RxD2
PTC2/SDA
PTC3/SCL
PTC4
PTC5
PTC6
PTC7
PTF2
PTF3
PTF4
PTE0/TxD1
PTE1/RxD1
IRQ
TXD0IN
RXDOUT
PTG6
PTG5
PTG4
PTG3
PTG2/EXTAL
PTG1/XTAL
PTG0/BKGD/MS
VSSAD
VDDAD
PTF1
PTF0
PTA7/KBIP7
PTA6/KBIP6
PTA5/KBIP5
PTA4/KBIP4
PTA3/KBIP3
PTA2/KBIP2
PTA1/KBIP1
PTA0/KBIP0
PTF7
PTF6
PTF5
VREFL
VREFH
PTB7/AD7
PTB6/AD6
PTB5/AD5
PTB4/AD4
PTB3/AD3
PTB2/AD2
PTB1/AD1
PTB0/AD0
PTE2/SS
PTE3/MISO
PTE4/MOSI
PTE5/SPSCK
PTE6
PTE7
VSS
VDD
PTD0/TPM1CH0
PTD1/TPM1CH1
PTD2/TPM1CH2
PTD3/TPM2CH0
PTD4/TPM2CH1
PTD5/TPM2CH2
PTD6/TPM2CH3
PTD7/TPM2CH4
C16 100n
INMAX667
U4
MAX667/SO
IN
OUT
LBI
DD
SET
LBO
SHDN
GND
R7 200K
R6 33K
C8 10u
SW1
J10
CON1
J11
CON1
BDM
R8 0
R9 0
R11 0
J4
RXDIN
TXD0OUT
C9 0.1uF
C10 0.1uF
C11 0.1uF
U3
ADM232A/SO
C1+
C1-
C2+
C2-
V+
GND
RC1IN
RC2IN
TR1IN
TR2IN
RC1OUT
RC2OUT
TR1OUT
TR2OUT
C13 0.1uF
C12 0.1uF
RXDOUT
TXD0OUT
AUX SERIAL (NOT APPLIED)
J2 ON/OFF
VBAT
U5
vin
gnd
on/offvout
bypass
3.3V regulator
C14 10u
C15 100n
J5
BATT
Title
LF125KHz TPMS TRANSMITTER
AXM-0423 REV A
Size A
Document Number
DOC-0423-030
Rev A
Date: Monday, September 24, 2007
Sheet 1 of 1