REIMS Module Block Diagram
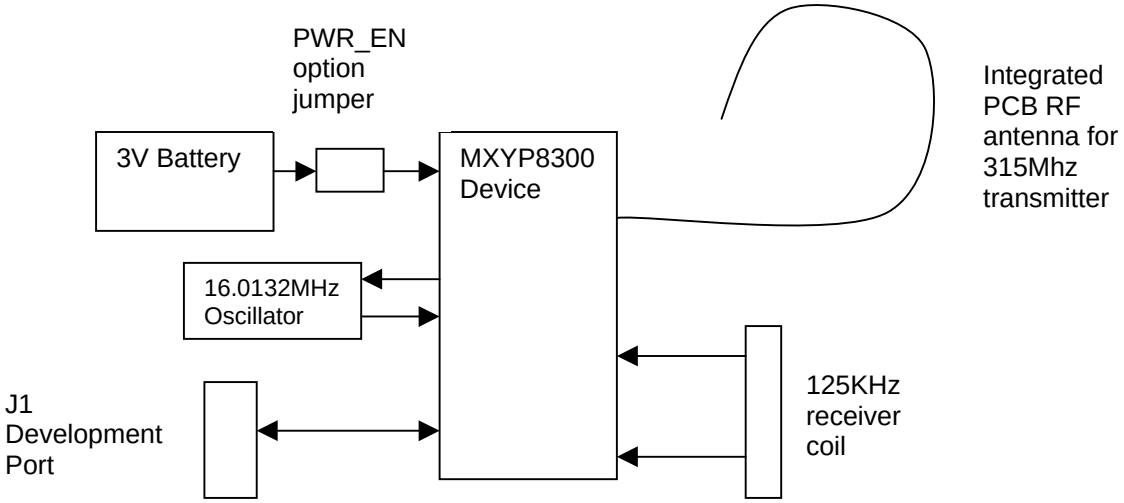
AXM-0422-01 315Mhz version