Green:Com(B1)=PCD(B1),IFM(B1)
Red:PCD(A),PCD(B1)
Blue:IFM(A),IFM(B1)

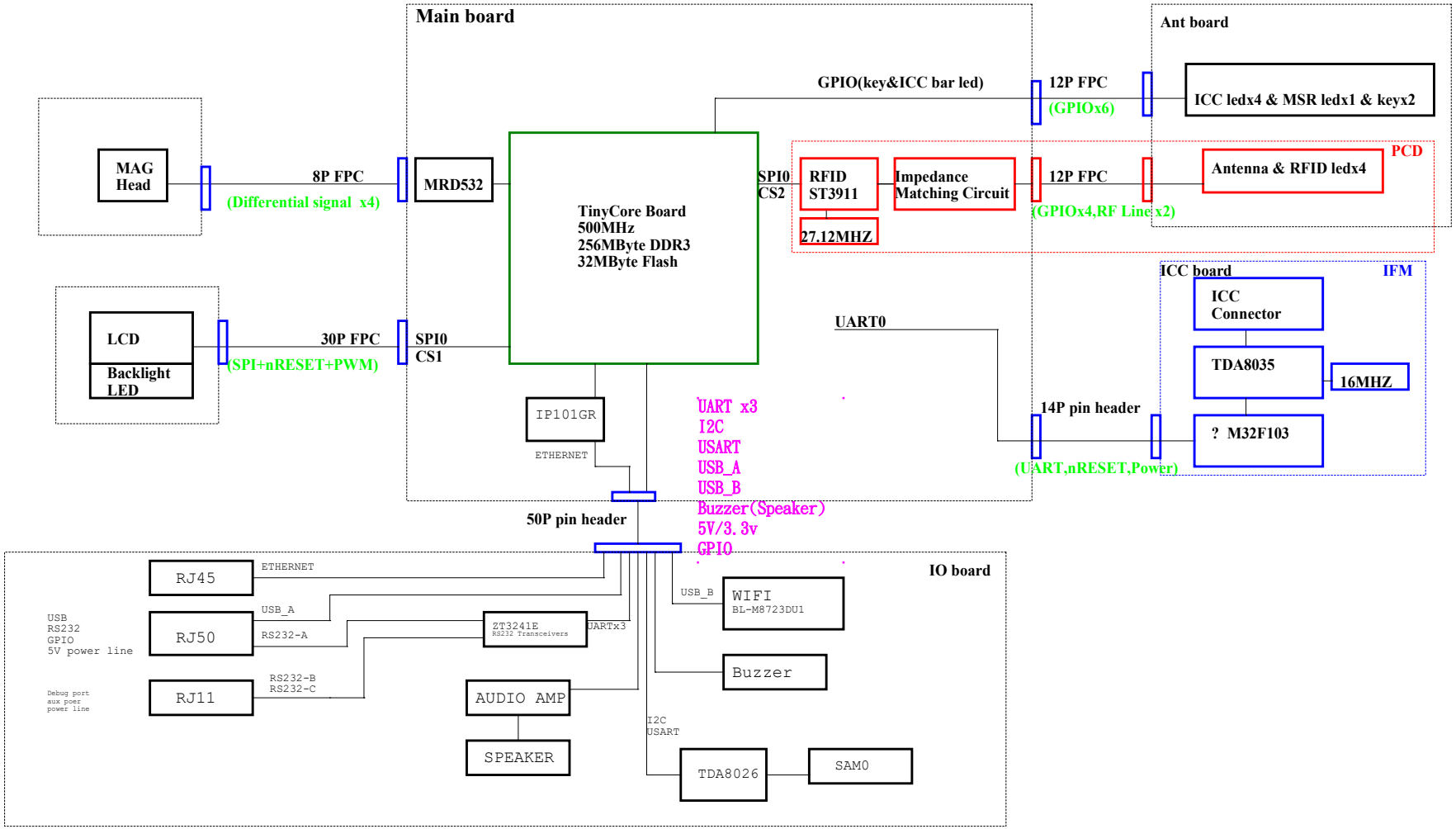

Design By	carlos	Approve By	Kevin Lai
Date	2019/11/20	Date	2019/11/20
Title	Block		
Size	Document Number B8S main board		Rev 2.0
UIC Uniform Industrial Corp.		Sheet 2 of 8	