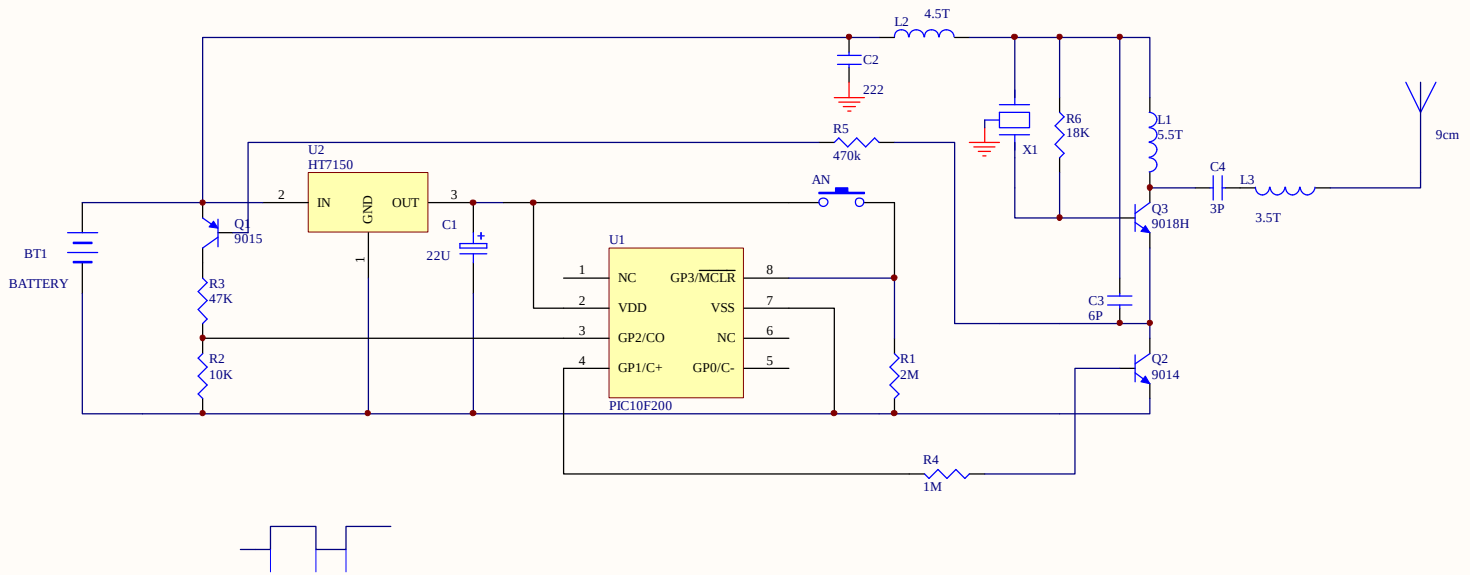

	=title		=revision
	=organization		=address1
	=DocumentFullPathAndName		
	=CurrentDate		=CurrentTime

11-Apr-2006