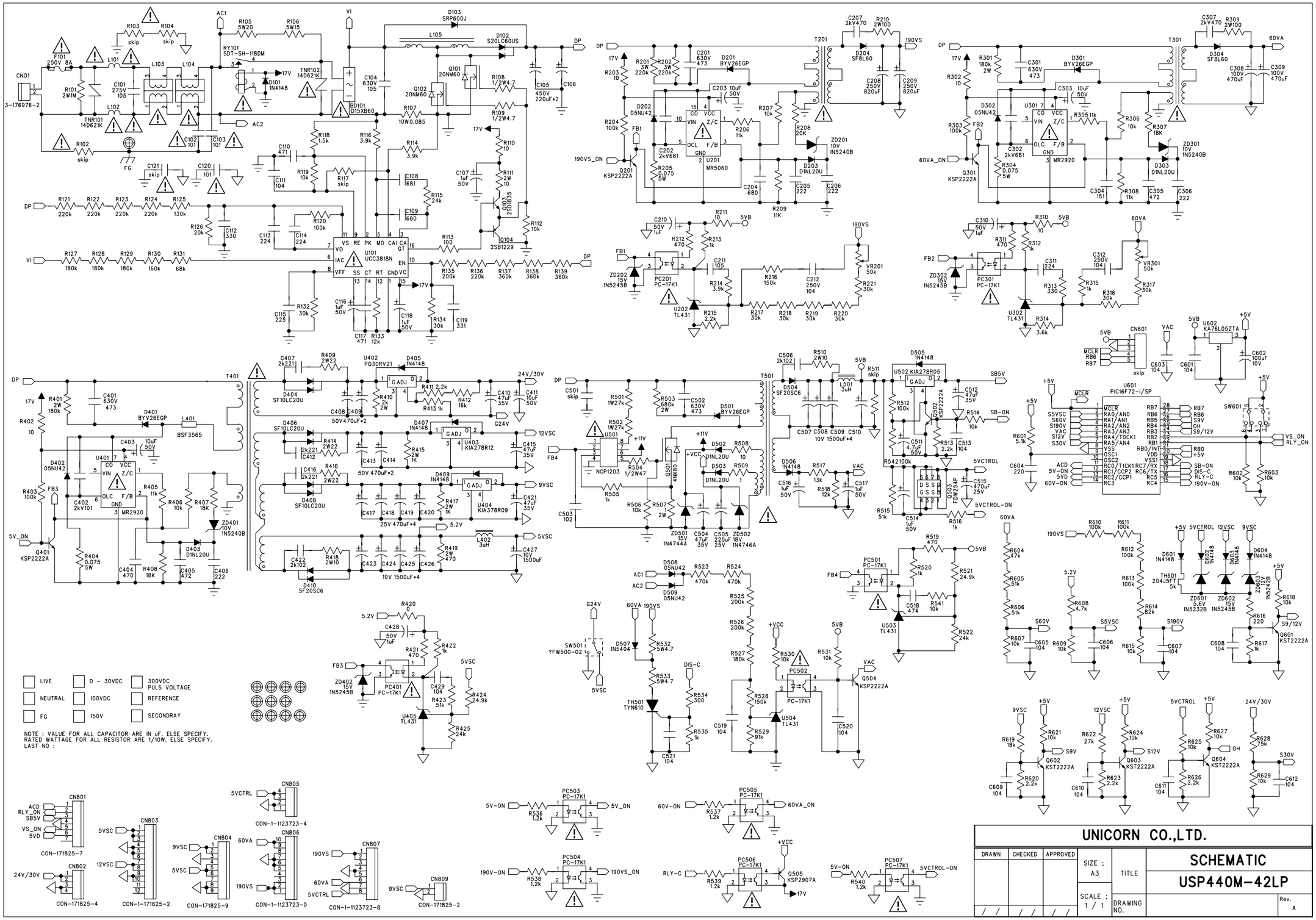
LIVE
NEUTRAL
FG
0 - 30VDC
100VDC
150V
300VDC PULS VOLTAGE
REFERENCE
SECONDRAY
NOTE : VALUE FOR ALL CAPACITOR ARE IN uF. ELSE SPECIFY.
RATED WATTAGE FOR ALL RESISTOR ARE 1/10W. ELSE SPECIFY.
LAST NO :
UNICORN CO.,LTD.
DRAWN
CHECKED
APPROVED
SIZE : A3
SCALE : 1 / 1
TITLE
SCHEMATIC
USP440M-42LP
DRAWING NO.
Rev. A

Revision	Date	Description of Change

REVISION RECORD			
LTR	ECO NO:	APPROVED:	DATE:

DRAWN: Y.S. JUNG	DATED:	COMPANY: WoosungNextier Corp.			
		TITLE: NP-50HEPX-Audio			
CHECKED:	DATED:	CODE:	SIZE:	DRAWING NO:	REV: 00
QUALITY CONTROL:	DATED:				
RELEASED:	DATED:	SCALE:		SHEET: 9 Page	

NP-50HEPX-AUDIO-00(05.02.23).sch-1 - Mon Mar 28 17:55:26 2005

REVISION RECORD			
LTR	ECO NO:	APPROVED:	DATE:

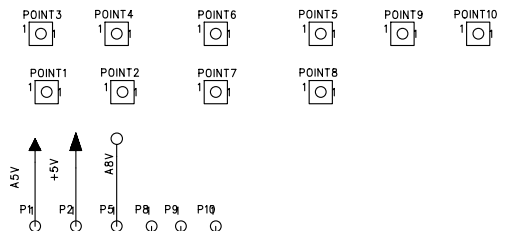

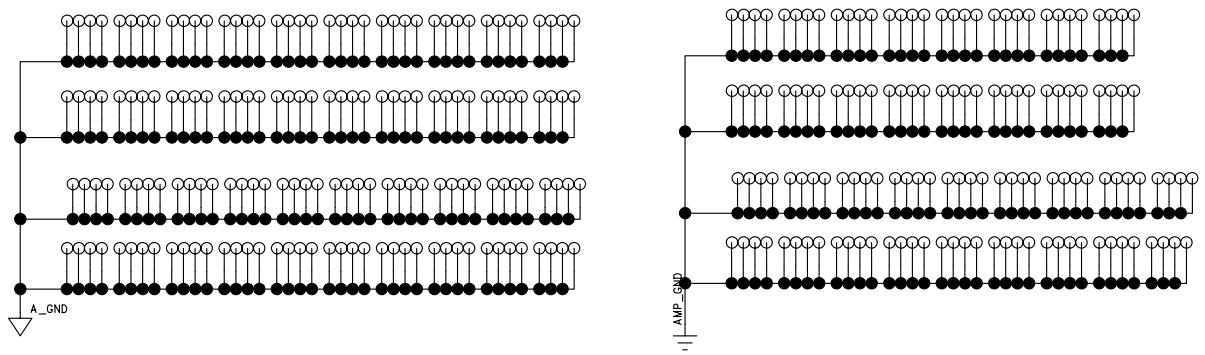

DRAWN: Y.S. JUNG	DATED:	COMPANY: WoosungNextier Corp.			
		TITLE: IC ID			
CHECKED:	DATED:	CODE:	SIZE:	DRAWING NO:	REV:
QUALITY CONTROL:	DATED:				
RELEASED:	DATED:	SCALE:		SHEET: 1 OF 9	

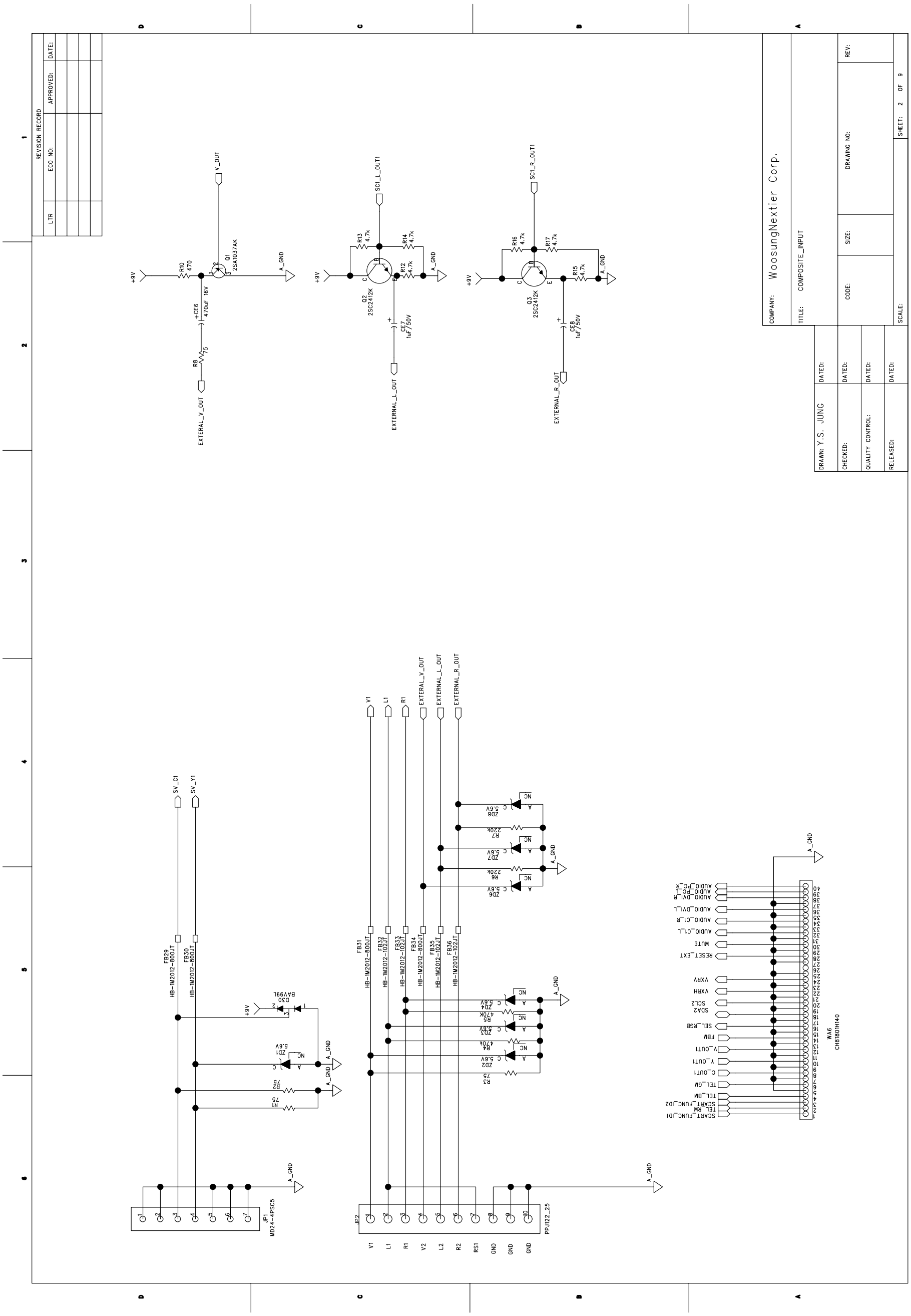
REVISION RECORD
LTR
ECO NO:
APPROVED:
DATE:
V_OUT
Q1 2SA1037AK
R10 470
+9V
A_GND
CE6 470uF 16V
R8 75
EXTERAL_V_OUT
SC1_L_OUT1
R13 4.7k
R14 4.7k
R12 4.7k
Q2 2SC2412K
CE7 1uF/50V
EXTERNAL_L_OUT
SC1_R_OUT1
R16 4.7k
R17 4.7k
R15 4.7k
Q3 2SC2412K
CE8 1uF/50V
EXTERNAL_R_OUT
COMPANY: WoosungNextier Corp.
TITLE: COMPOSITE_INPUT
CODE:
SIZE:
DRAWING NO:
REV:
SCALE:
SHEET: 2 OF 9
DRAWN: Y.S. JUNG
CHECKED:
QUALITY CONTROL:
RELEASED:
DATED:
SV_C1
SV_Y1
FB29 HB-1M2012-800JT
FB30 HB-1M2012-800JT
BAV99L D30
ZD1 5.6V
R2 75
R1 75
JP1 MD24-4PSC5
V1
L1
R1
EXTERAL_V_OUT
EXTERNAL_L_OUT
EXTERNAL_R_OUT
FB31 HB-1M2012-800JT
FB32 HB-1M2012-102JT
FB33 HB-1M2012-102JT
FB34 HB-1M2012-800JT
FB35 HB-1M2012-102JT
FB36 HB-1M2012-102JT
ZD2 5.6V
R3 75
ZD3 5.6V
R4 470K
ZD4 5.6V
R5 470K
ZD5 5.6V
R6 220K
ZD6 5.6V
R7 220K
ZD7 5.6V
ZD8 5.6V
NC
JP2 PPJ122_25
V2
L2
R2
RS1
GND
AUDIO_PC_R
AUDIO_PC_L
AUDIO_DVI_R
AUDIO_DVI_L
AUDIO_C1_R
AUDIO_C1_L
MUTE
RESET_EXT
VXRV
VXRH
SCL2
SDA2
SEL_RGB
FBM
V_OUT1
Y_OUT1
C_OUT1
TEL_GM
TEL_BM
TEL_RM
SCART_FUNC_ID2
SCART_FUNC_ID1
WA6 CH81B01H140

REVISION RECORD			
LTR	ECO NO:	APPROVED:	DATE:

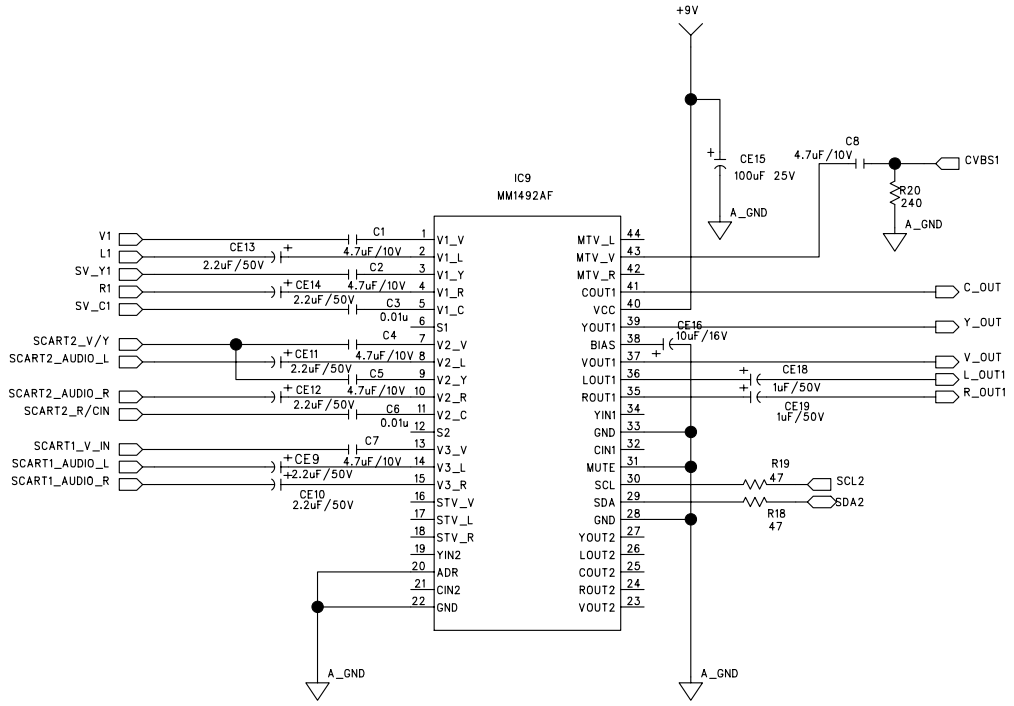

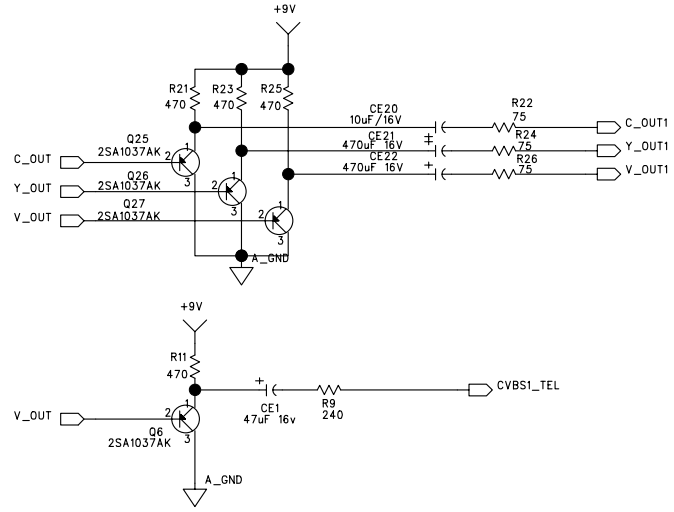

COMPANY: WoosungNextier Corp.					
TITLE: VIDEO_SWITCHING					
DRAWN: Y.S. JUNG	DATED:	CODE:	SIZE:	DRAWING NO:	REV:
CHECKED:	DATED:				
QUALITY CONTROL:	DATED:				
RELEASED:	DATED:	SCALE:		SHEET: 3 OF 9	

REVISION RECORD			
LTR	ECO NO:	APPROVED:	DATE:

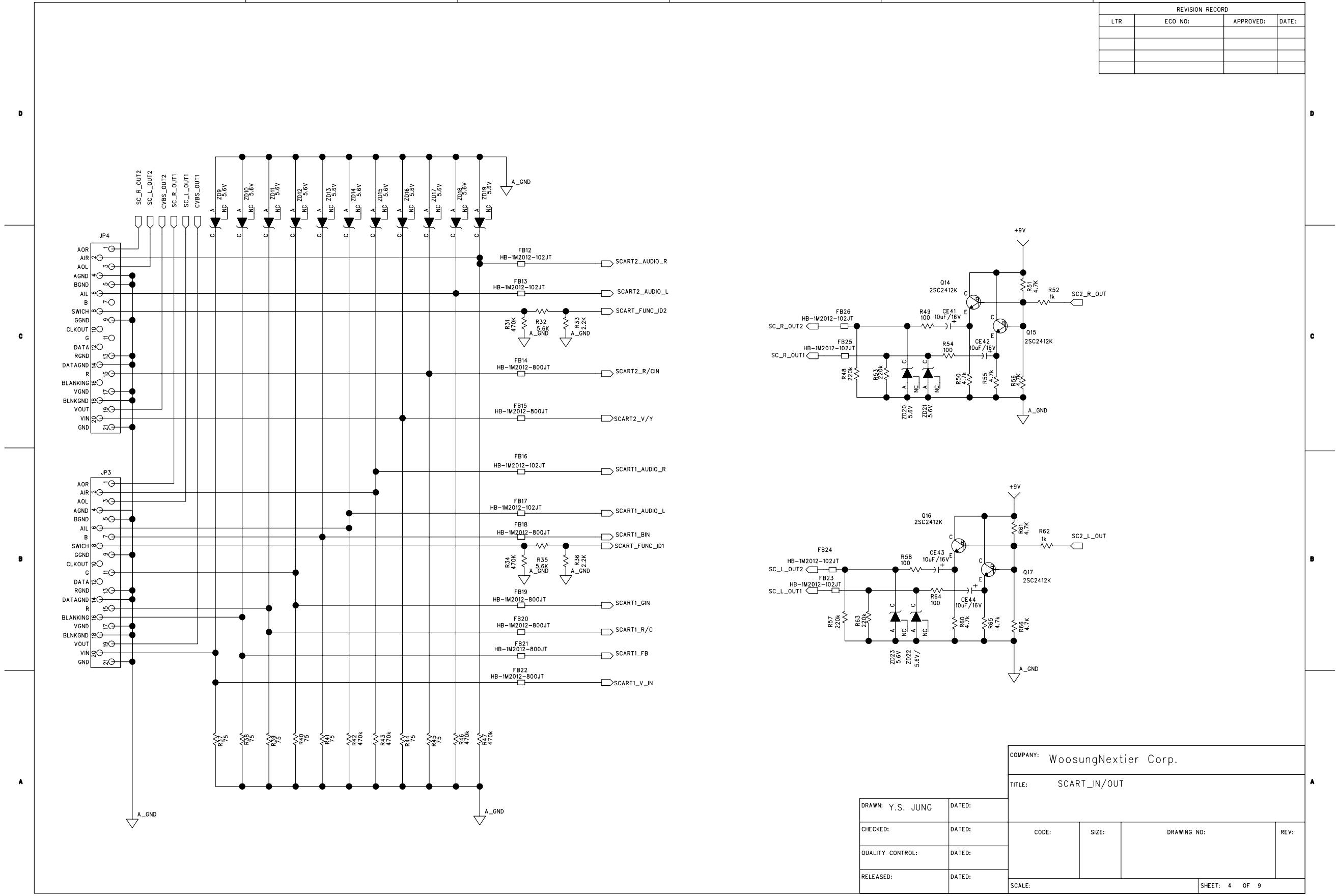

COMPANY:	WoosungNextier Corp.		
TITLE:	SCART_IN/OUT		
DRAWN: Y.S. JUNG	DATED:	CODE:	SIZE:	DRAWING NO:	REV:
CHECKED:	DATED:				
QUALITY CONTROL:	DATED:				
RELEASED:	DATED:	SCALE:		SHEET: 4 OF 9	

REVISION RECORD			
LTR	ECO NO:	APPROVED:	DATE:

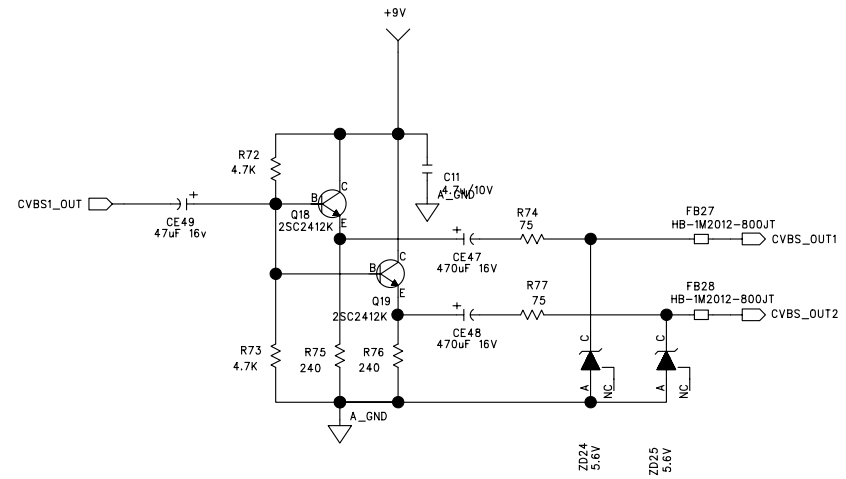

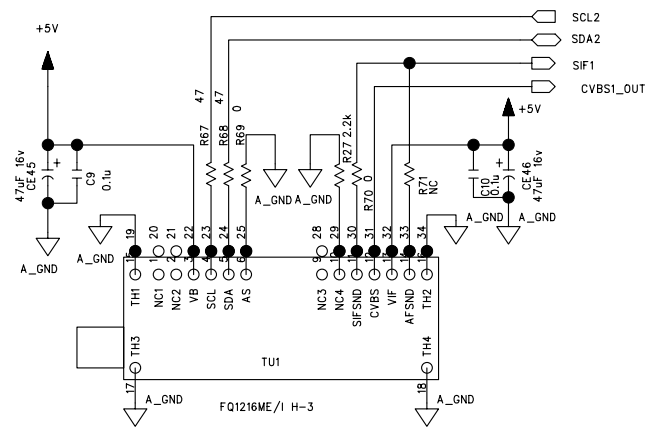

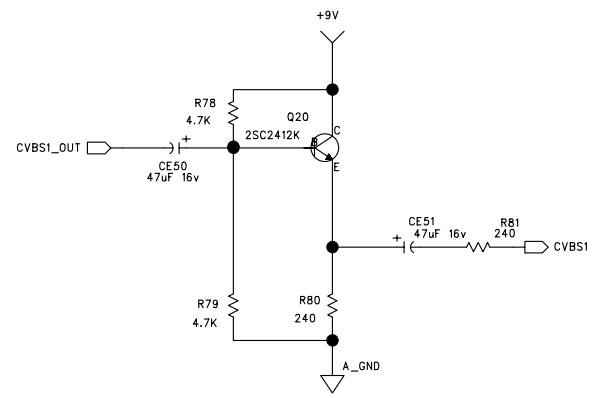

COMPANY: WoosungNextier Corp.				
TITLE: TUNER				
DRAWN: Y.S. JUNG	DATED:			
CHECKED:	DATED:	CODE:	SIZE:	DRAWING NO: / REV:
QUALITY CONTROL:	DATED:			
RELEASED:	DATED:	SCALE:		SHEET: 5 OF 9

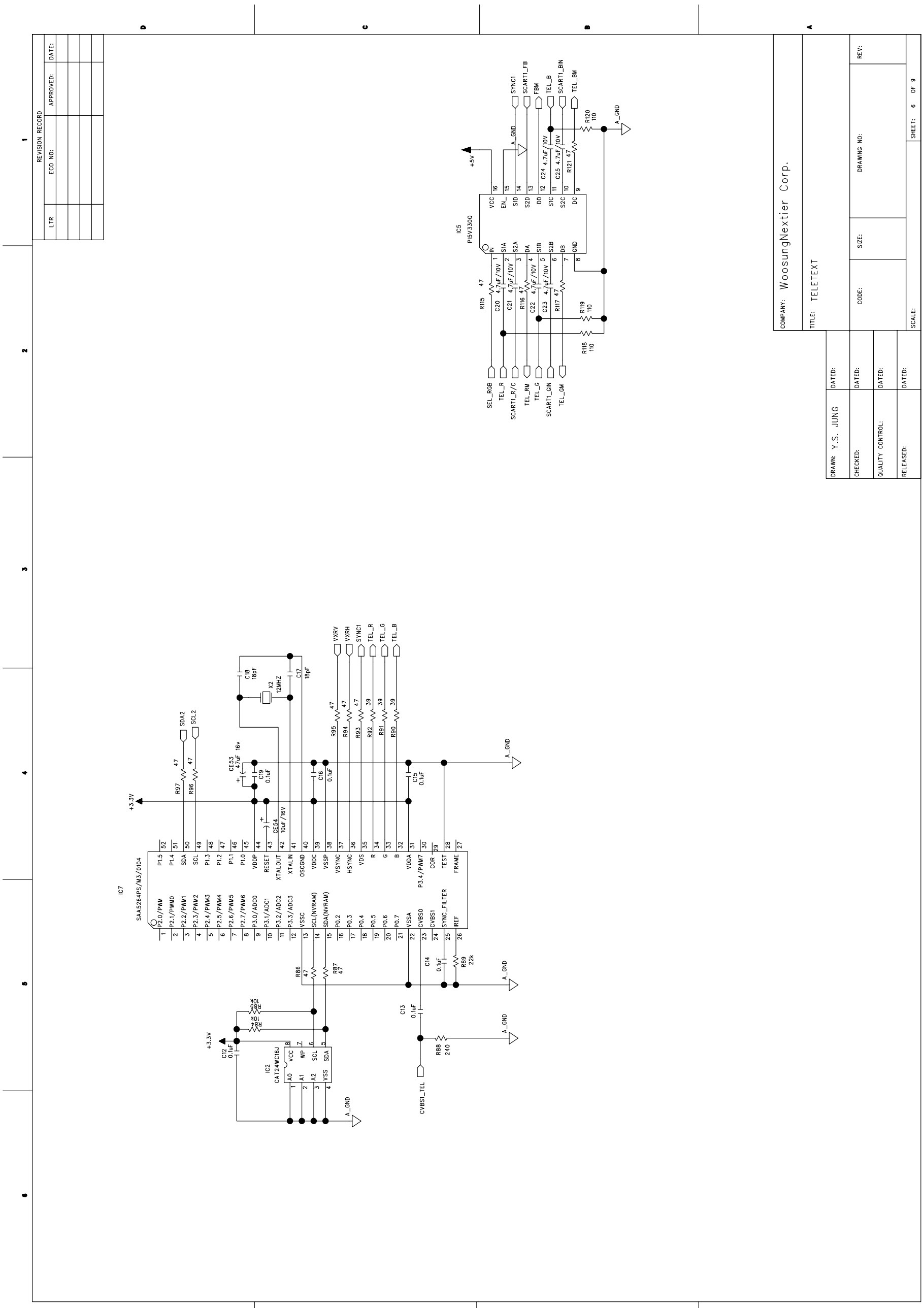
REVISION RECORD
LTR
ECO NO:
APPROVED:
DATE:
IC5
PI5V330Q
IC7
SAA5264PS/M3/0104
IC2
CAT24WC16J
SYNC1
SCART1_FB
FBM
TEL_B
SCART1_BIN
TEL_BM
SEL_RGB
TEL_R
SCART1_R/C
TEL_RM
TEL_G
SCART1_GIN
TEL_GM
VXRV
VXRH
SDA2
SCL2
CVBS1_TEL
+5V
+3.3V
A_GND
X2
12MHZ
COMPANY: WoosungNextier Corp.
TITLE: TELETEXT
CODE:
SIZE:
DRAWING NO:
REV:
SCALE:
SHEET: 6 OF 9
DRAWN: Y.S. JUNG
CHECKED:
QUALITY CONTROL:
RELEASED:
DATED:

REVISION RECORD			
LTR	ECO NO:	APPROVED:	DATE:

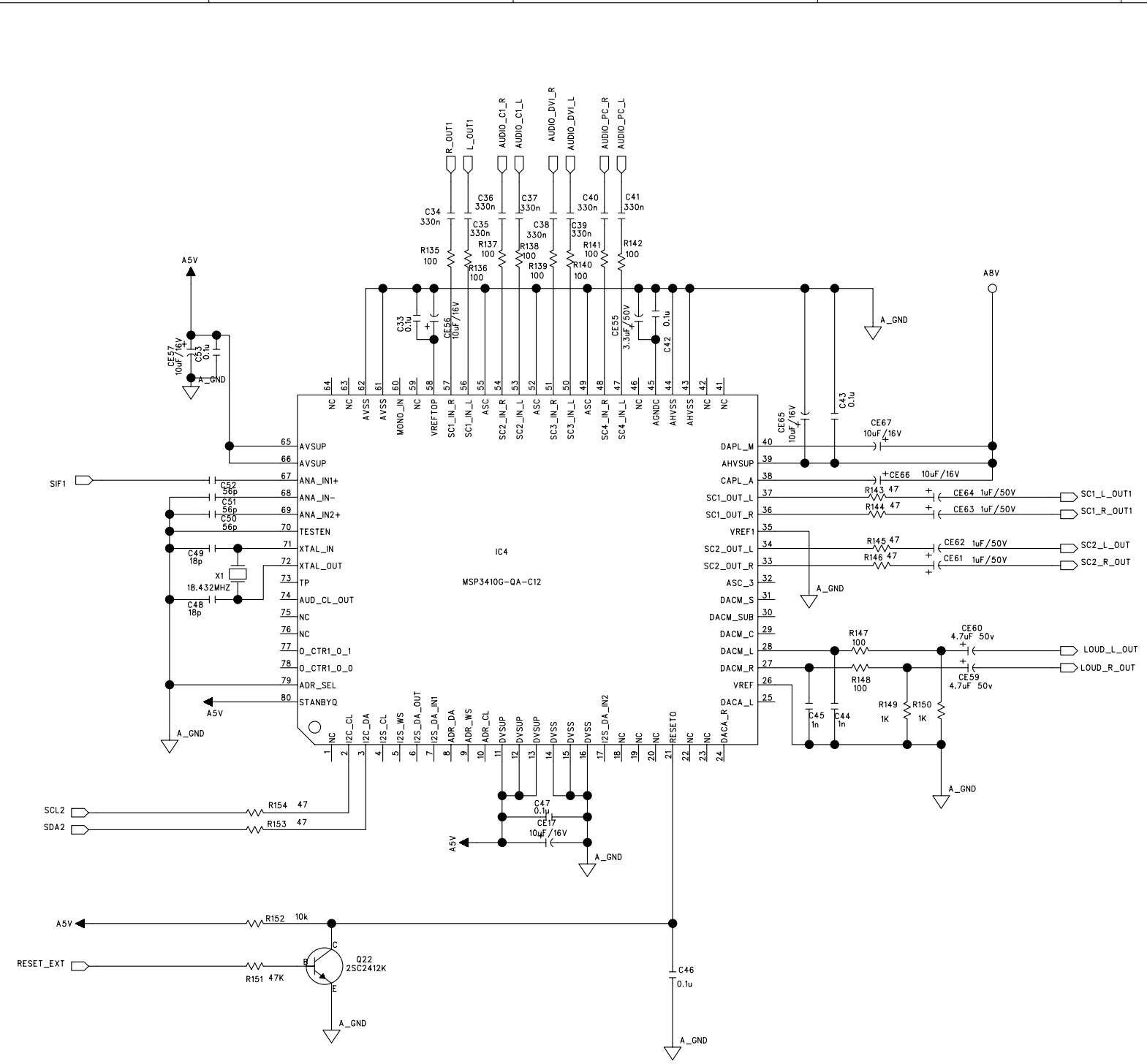

COMPANY: WoosungNextier Corp.			
TITLE: Sound Processor			
DRAWN: Y.S. JUNG	DATED:		
CHECKED:	DATED:	CODE: / SIZE: / DRAWING NO:	REV:
QUALITY CONTROL:	DATED:		
RELEASED:	DATED:	SCALE:	SHEET: 7 OF 9

REVISION RECORD			
LTR	ECO NO:	APPROVED:	DATE:

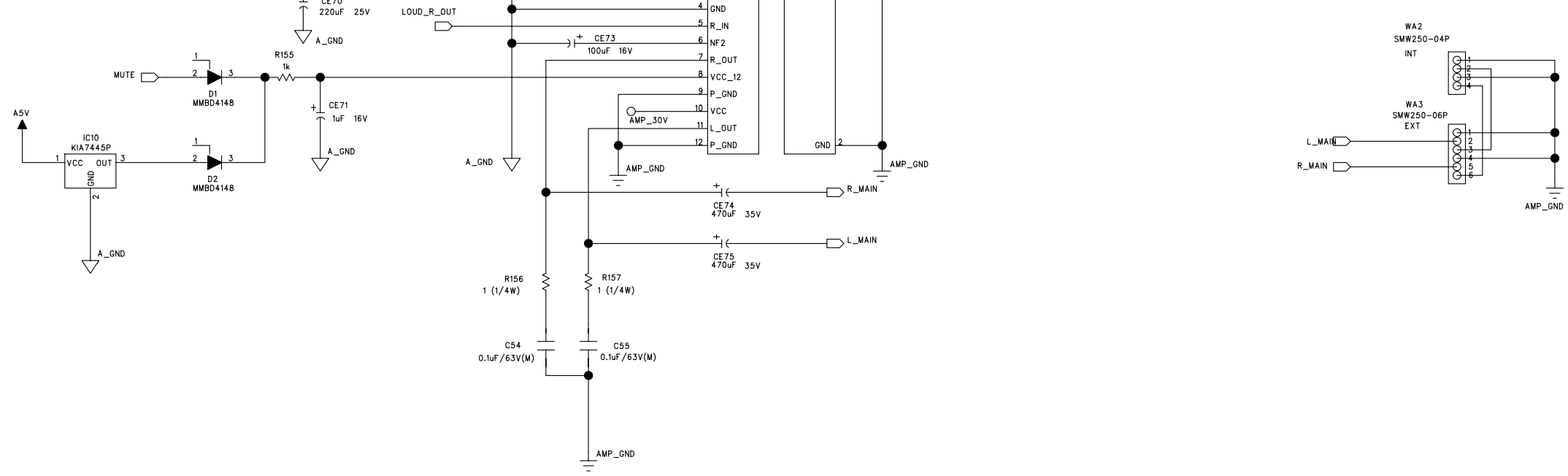

COMPANY: WoosungNextier Corp.					
TITLE: POWER AMP					
DRAWN: Y.S. JUNG	DATED:				
CHECKED:	DATED:	CODE:	SIZE:	DRAWING NO:	REV:
QUALITY CONTROL:	DATED:				
RELEASED:	DATED:	SCALE:		SHEET: 8 OF 9	

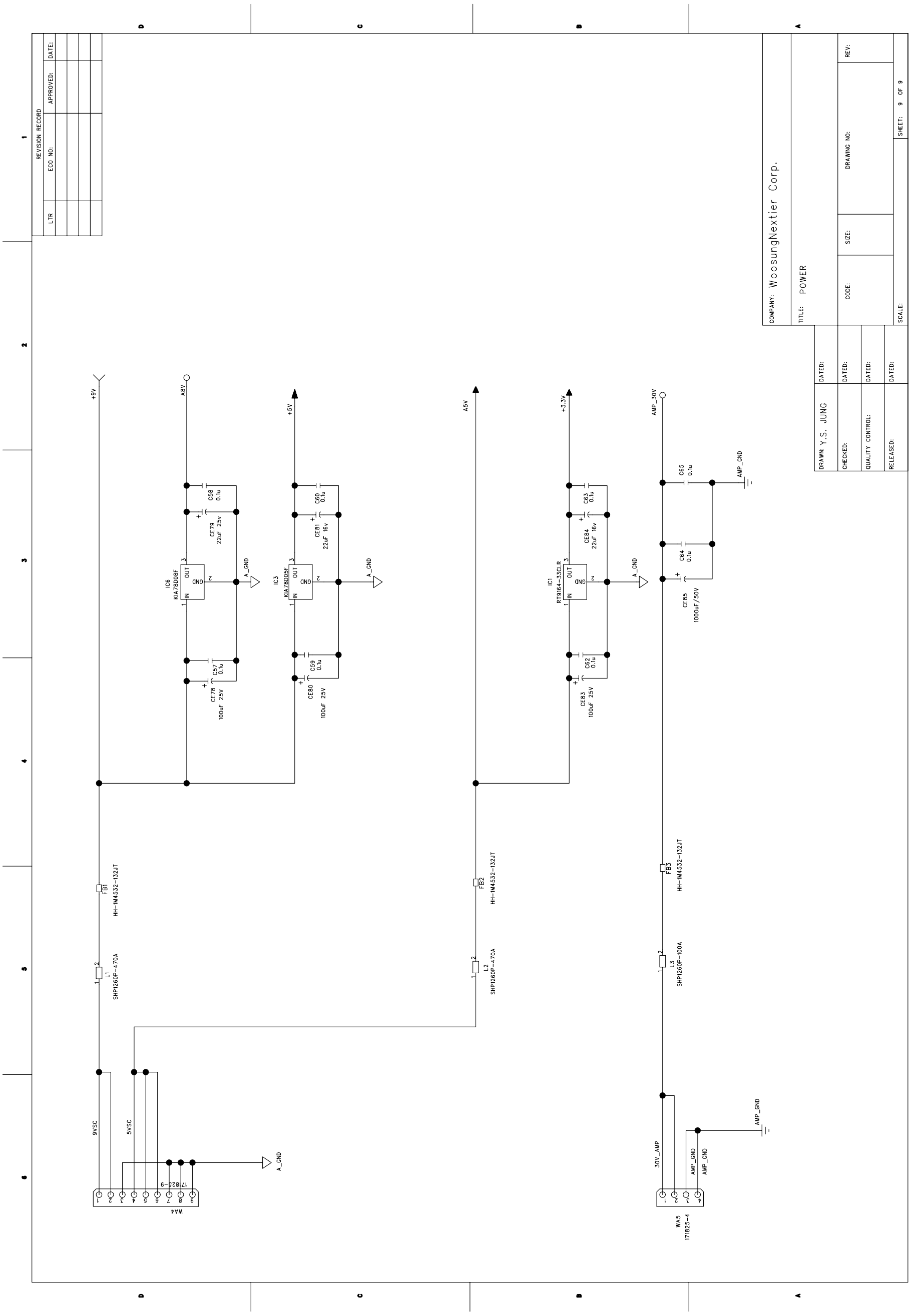
REVISION RECORD
LTR
ECO NO:
APPROVED:
DATE:
COMPANY: WoosungNextier Corp.
TITLE: POWER
CODE:
SIZE:
DRAWING NO:
REV:
SCALE:
SHEET: 9 OF 9
DRAWN: Y.S. JUNG
DATED:
CHECKED:
QUALITY CONTROL:
RELEASED:
+9V
A8V
+5V
A5V
+3.3V
AMP_30V
IC6
KIA78D08F
IC3
KIA78D05F
IC1
RT9164-33CLR
IN
OUT
GND
A_GND
AMP_GND
C57 0.1u
C58 0.1u
C59 0.1u
C60 0.1u
C62 0.1u
C63 0.1u
C64 0.1u
C65 0.1u
CE78 100uF 25V
CE79 22uF 25v
CE80 100uF 25V
CE81 22uF 16v
CE83 100uF 25V
CE84 22uF 16v
CE85 1000uF/50V
FB1 HH-1M4532-132JT
FB2 HH-1M4532-132JT
FB3 HH-1M4532-132JT
L1 SHP1260P-470A
L2 SHP1260P-470A
L3 SHP1260P-100A
9VSC
5VSC
WA4 171825-9
30V_AMP
WA5 171825-4

Revision	Date	Description of Change
00	2003/07/02	Initial release

REVISION RECORD			
LTR	ECO NO:	APPROVED:	DATE:

DRAWN: Lee Je Un	DATED:	COMPANY: WoosungNextier Corp.	
		TITLE: NP-50HEPX-Main	
CHECKED:	DATED:	CODE:	SIZE:
QUALITY CONTROL:	DATED:	DRAWING NO:	REV: 00
RELEASED:	DATED:	SCALE:	SHEET: 12 Page

NP-42HEPX-Main-01(HDCP).sch-1 - Mon Mar 28 18:08:33 2005

REVISION RECORD			
LTR	ECO NO:	APPROVED:	DATE:

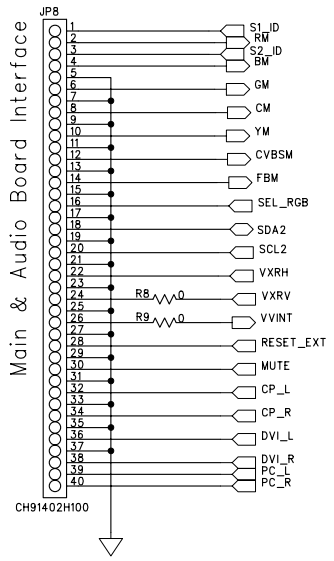

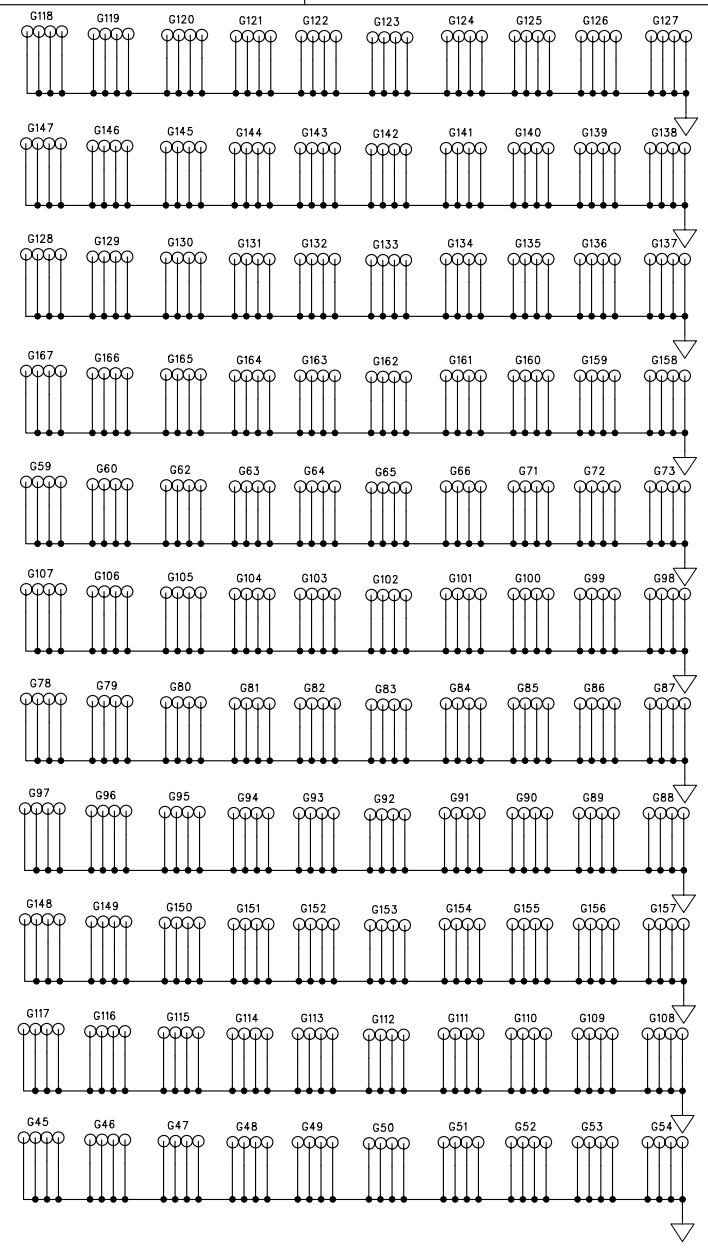

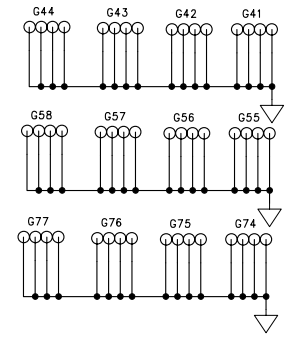

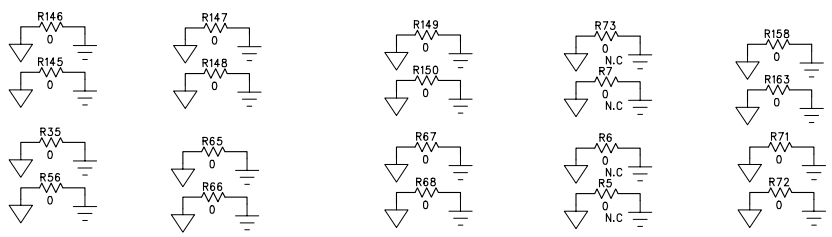

COMPANY: WoosungNextier Corp.				
TITLE: Interface				
DRAWN: Lee Je Un	DATED:	CODE:	SIZE:	DRAWING NO:	REV:
CHECKED:	DATED:				
QUALITY CONTROL:	DATED:				
RELEASED:	DATED:	SCALE:		SHEET: 1 OF 12	

REVISION RECORD			
LTR	ECO NO:	APPROVED:	DATE:

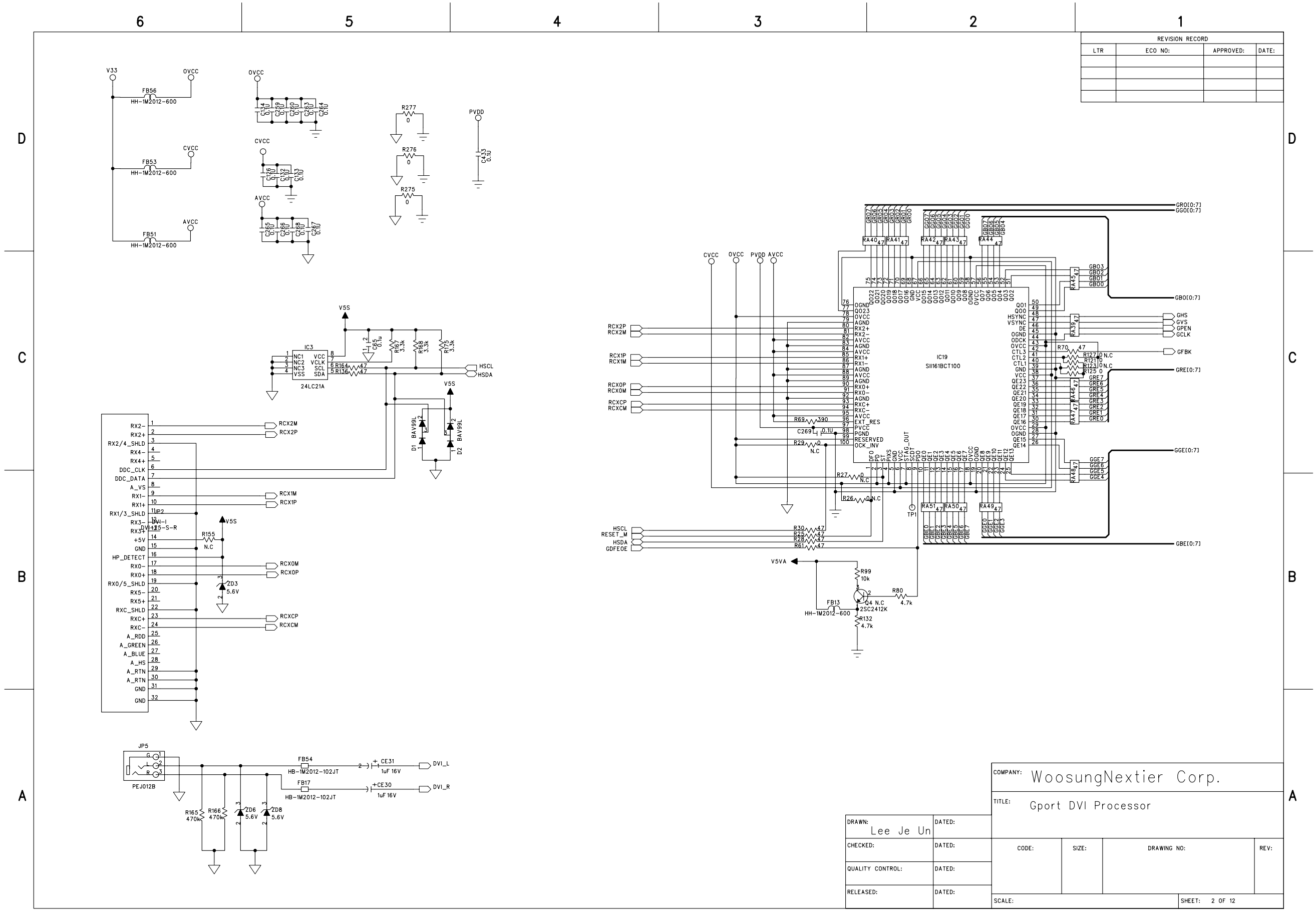

COMPANY: WoosungNextier Corp.			
TITLE: Gport DVI Processor			
DRAWN: Lee Je Un	DATED:		
CHECKED:	DATED:	CODE: / SIZE: / DRAWING NO:	REV:
QUALITY CONTROL:	DATED:		
RELEASED:	DATED:	SCALE:	SHEET: 2 OF 12

REVISION RECORD			
LTR	ECO NO:	APPROVED:	DATE:

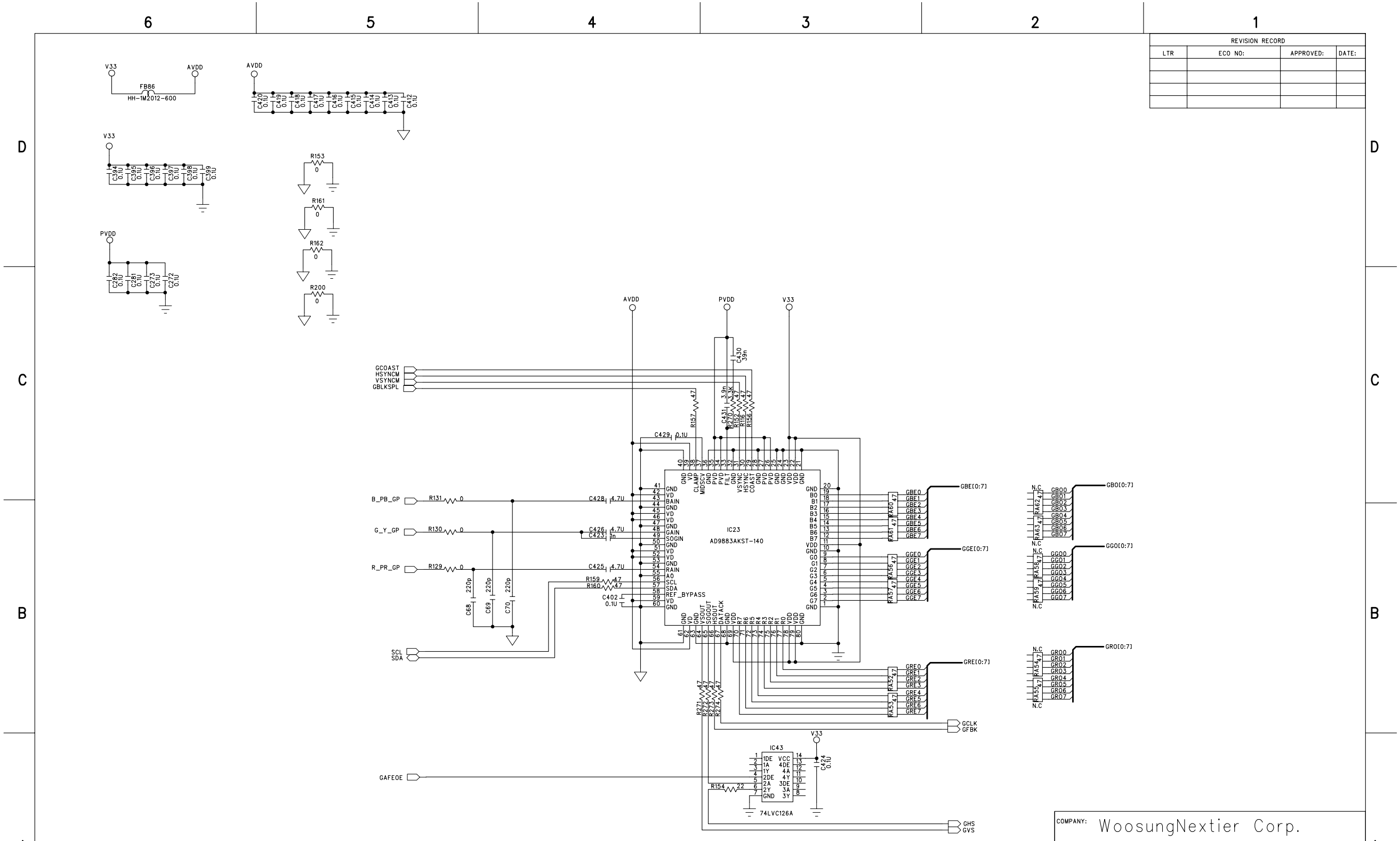

COMPANY: WoosungNextier Corp.			
TITLE: Gport ADC Processor			
DRAWN: Lee Je un	DATED:		
CHECKED:	DATED:	CODE:	SIZE:	DRAWING NO:	REV:
QUALITY CONTROL:	DATED:		
RELEASED:	DATED:	SCALE:	SHEET: 3 OF 12

REVISION RECORD			
LTR	ECO NO:	APPROVED:	DATE:

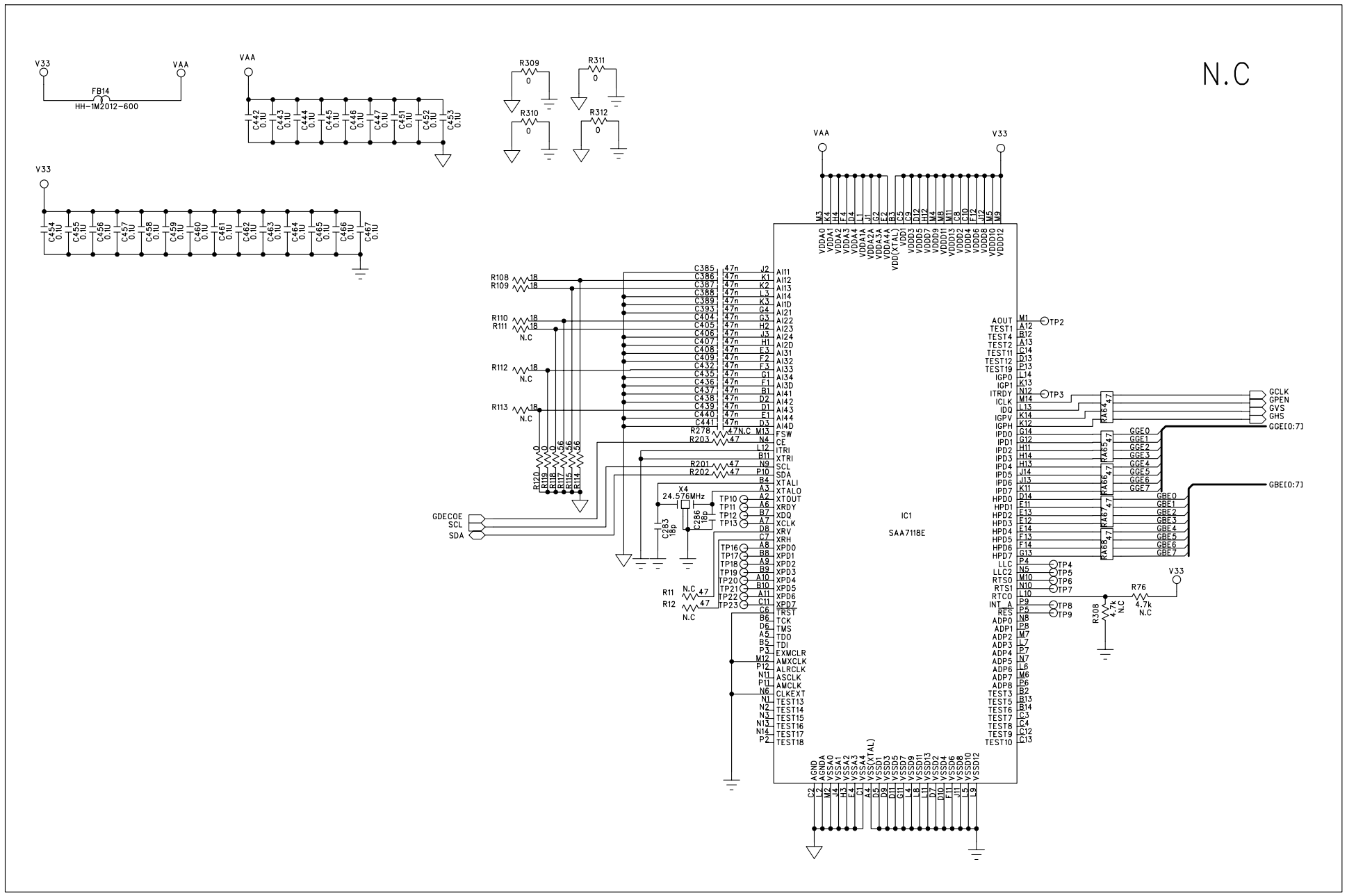

COMPANY: WoosungNextier Corp.			
TITLE: Gport Decoder Processor			
DRAWN: Lee Je Un	DATED:		
CHECKED:	DATED:	CODE: / SIZE: / DRAWING NO:	REV:
QUALITY CONTROL:	DATED:		
RELEASED:	DATED:	SCALE:	SHEET: 4 OF 12

REVISION RECORD			
LTR	ECO NO:	APPROVED:	DATE:

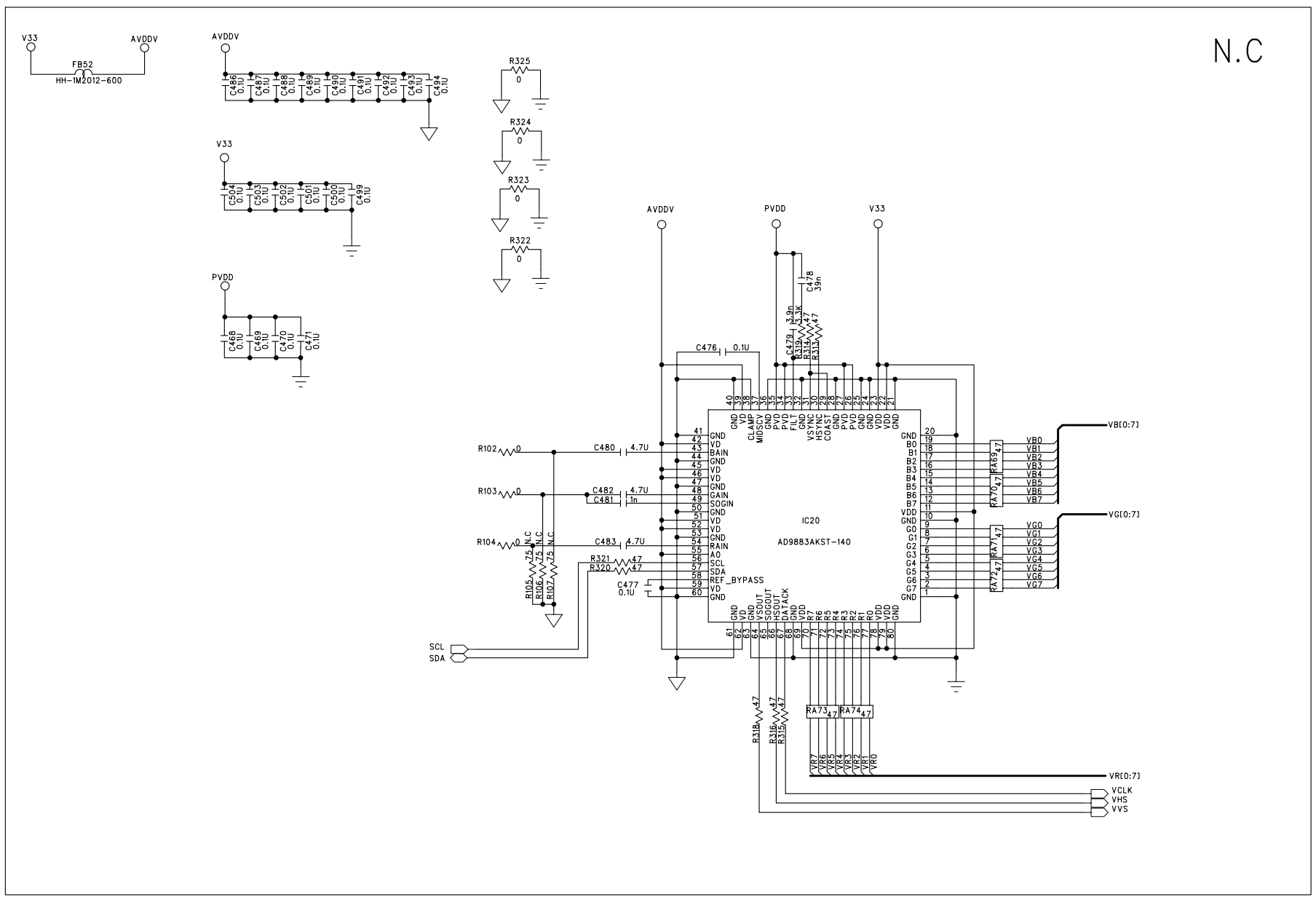

COMPANY: WoosungNextier Corp.			
TITLE: Vport ADC Processor			
DRAWN: Lee Je Un	DATED:		
CHECKED:	DATED:	CODE:	SIZE:	DRAWING NO:	REV:
QUALITY CONTROL:	DATED:				
RELEASED:	DATED:	SCALE:	SHEET: 5 OF 12		

REVISION RECORD			
LTR	ECO NO:	APPROVED:	DATE:

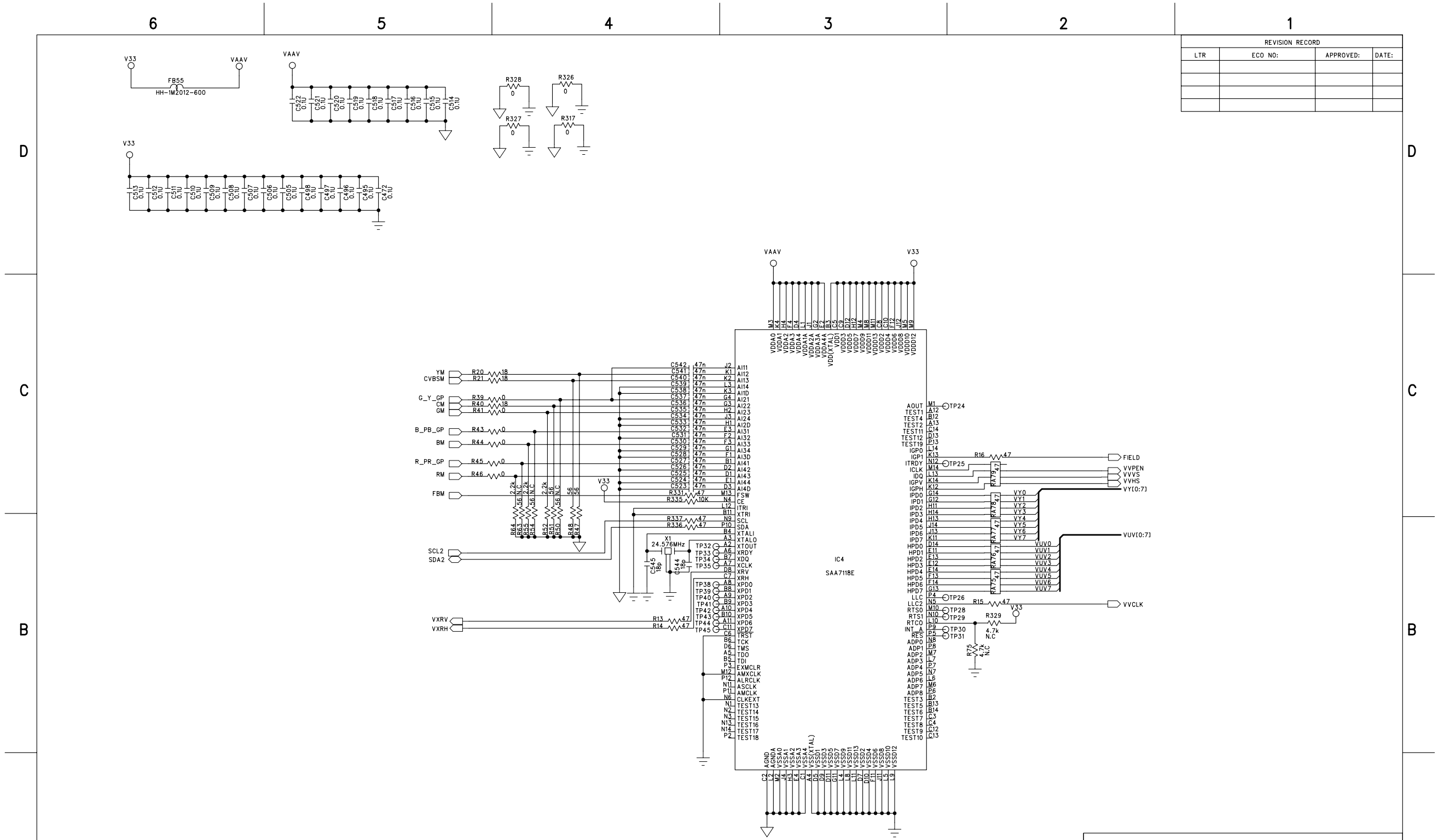

DRAWN: Lee Je Un	DATED:	COMPANY: WoosungNextier Corp.	
		TITLE: Vport Decoder Processor	
CHECKED:	DATED:	CODE: / SIZE: / DRAWING NO:	REV:
QUALITY CONTROL:	DATED:		
RELEASED:	DATED:	SCALE:	SHEET: 6 OF 12

REVISION RECORD			
LTR	ECO NO:	APPROVED:	DATE:

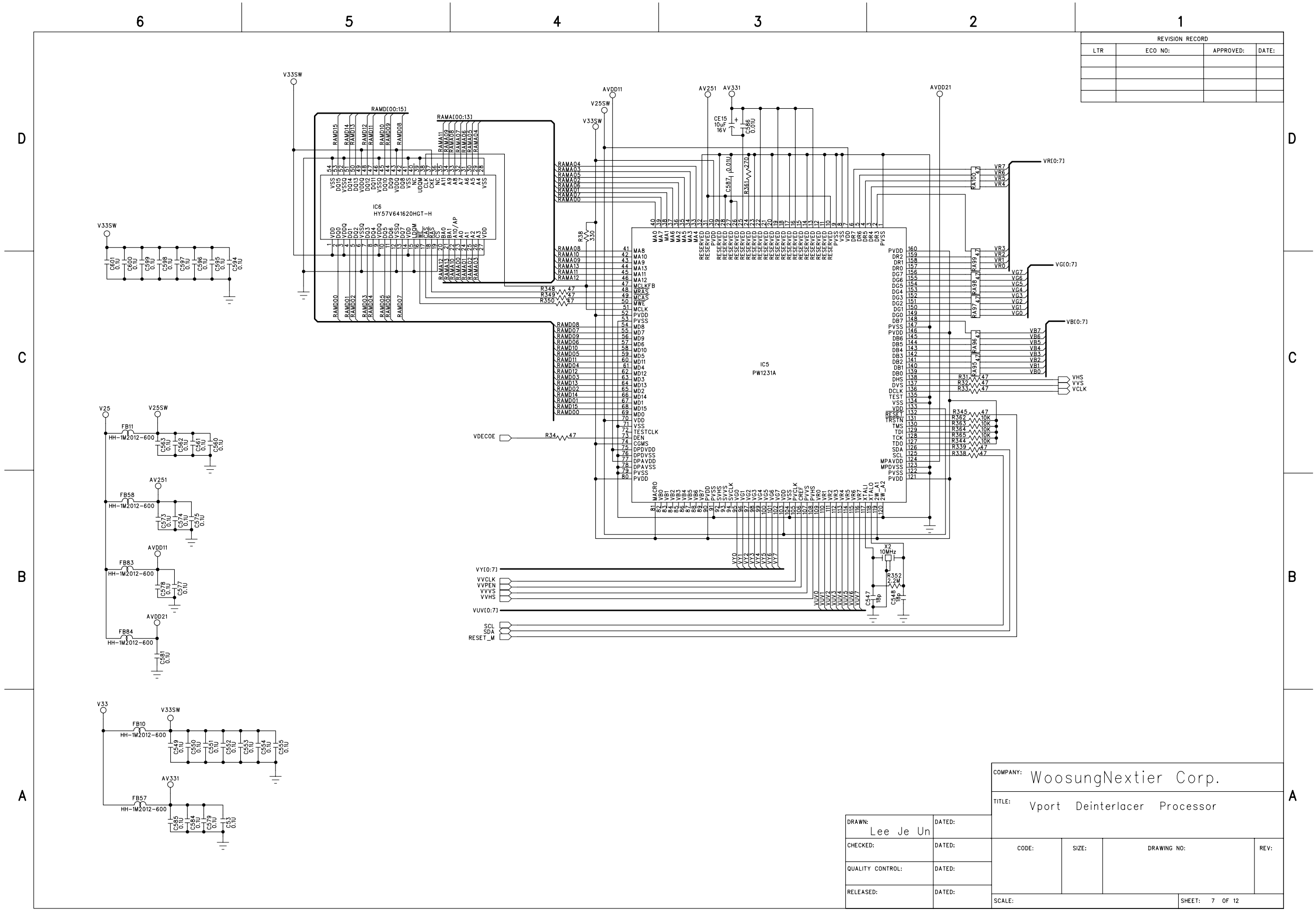

COMPANY: WoosungNextier Corp.			
TITLE: Vport Deinterlacer Processor			
DRAWN: Lee Je Un	DATED:		
CHECKED:	DATED:	CODE: / SIZE: / DRAWING NO:	REV:
QUALITY CONTROL:	DATED:		
RELEASED:	DATED:	SCALE:	SHEET: 7 OF 12

REVISION RECORD			
LTR	ECO NO:	APPROVED:	DATE:

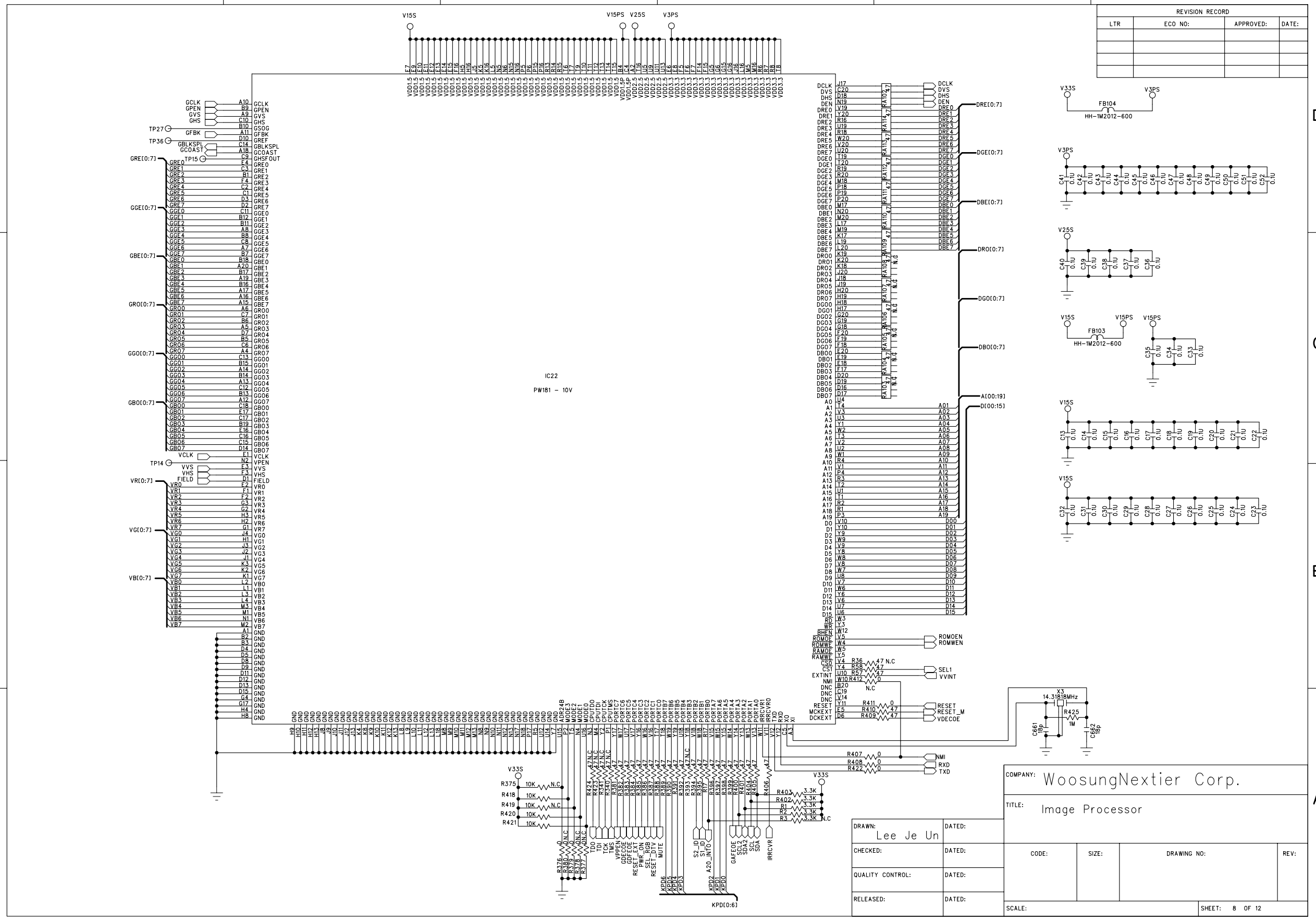

COMPANY: WoosungNextier Corp.

TITLE: Image Processor

DRAWN: Lee Je Un	DATED:		
CHECKED:	DATED:	CODE:	SIZE:	DRAWING NO:	REV:
QUALITY CONTROL:	DATED:				
RELEASED:	DATED:	SCALE:	SHEET: 8 OF 12

REVISION RECORD			
LTR	ECO NO:	APPROVED:	DATE:

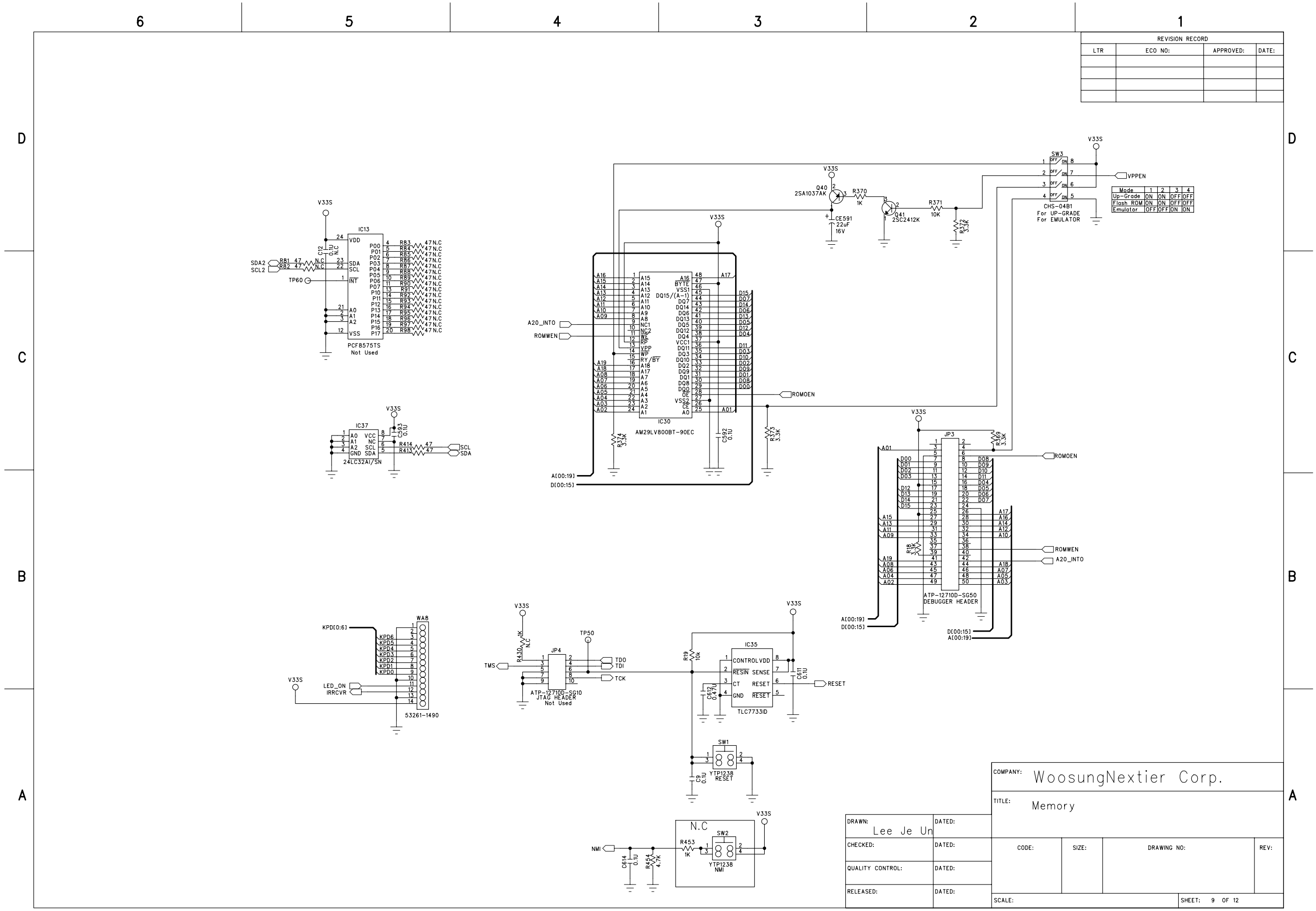

COMPANY: WoosungNextier Corp.			
TITLE: Memory			
DRAWN: Lee Je Un	DATED:	CODE:	SIZE:	DRAWING NO:	REV:
CHECKED:	DATED:				
QUALITY CONTROL:	DATED:				
RELEASED:	DATED:	SCALE:	SHEET: 9 OF 12		

REVISION RECORD			
LTR	ECO NO:	APPROVED:	DATE:

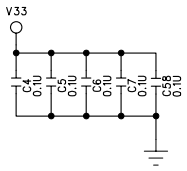

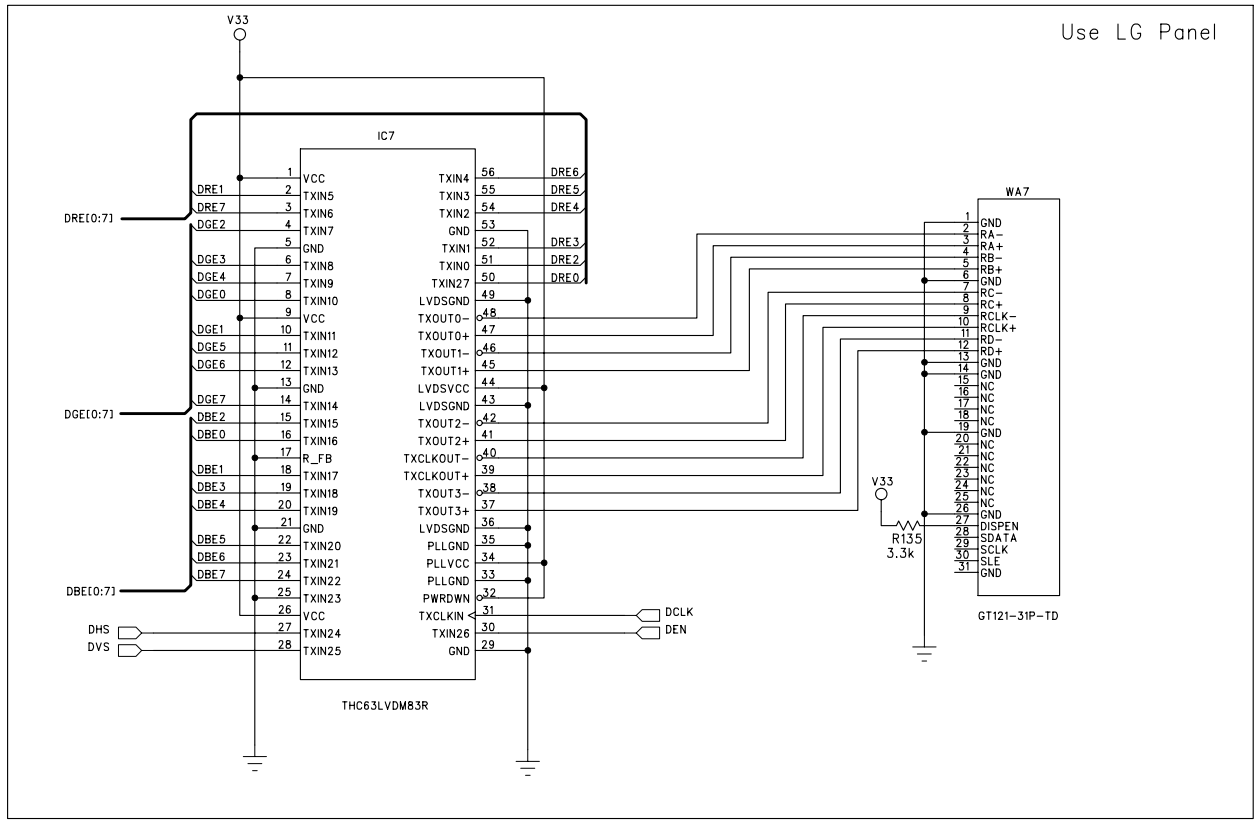

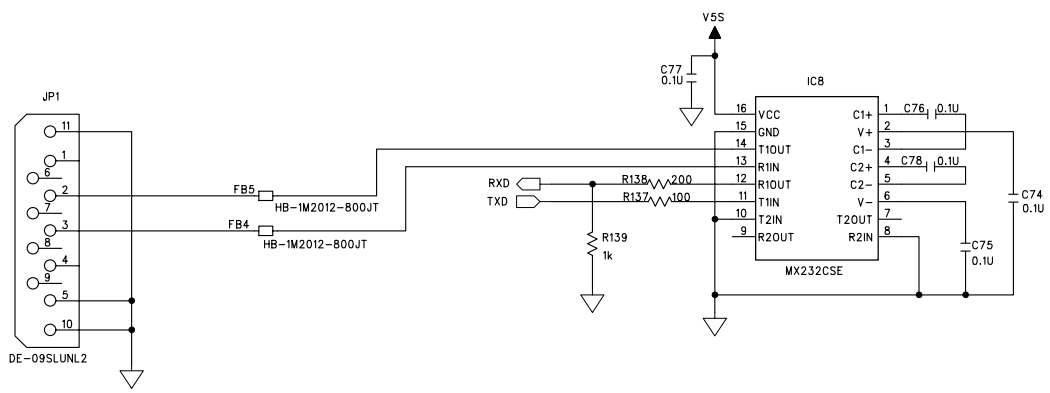

COMPANY: WoosungNextier Corp.					
TITLE: Display					
DRAWN: Lee Je Un	DATED:				
CHECKED:	DATED:	CODE:	SIZE:	DRAWING NO:	REV:
QUALITY CONTROL:	DATED:				
RELEASED:	DATED:	SCALE:		SHEET: 10 OF 12	

REVISION RECORD			
LTR	ECO NO:	APPROVED:	DATE:

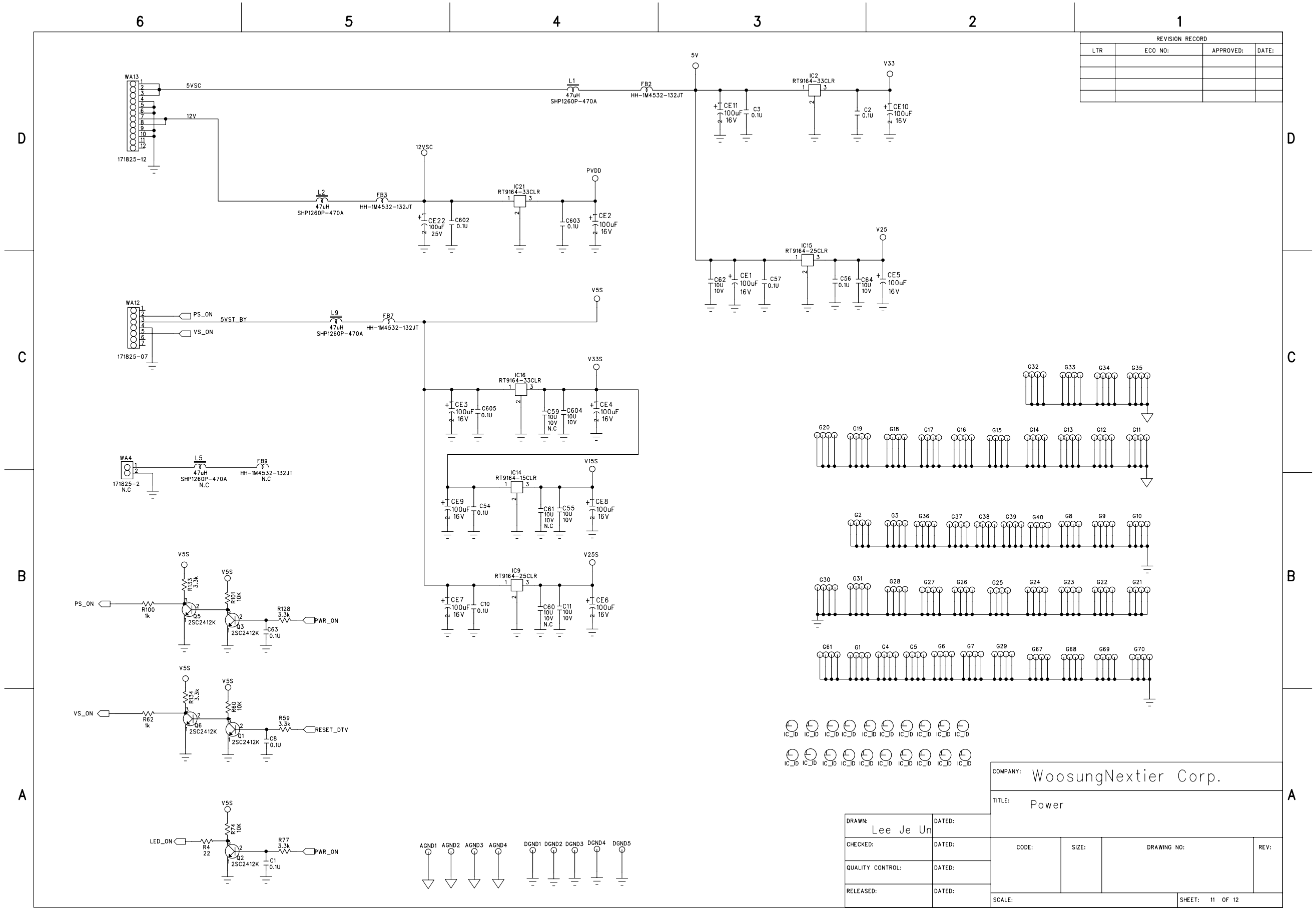

COMPANY: WoosungNextier Corp.			
TITLE: Power			
DRAWN: Lee Je Un	DATED:		
CHECKED:	DATED:	CODE: / SIZE: / DRAWING NO:	REV:
QUALITY CONTROL:	DATED:		
RELEASED:	DATED:	SCALE:	SHEET: 11 OF 12

REVISION RECORD			
LTR	ECO NO:	APPROVED:	DATE:

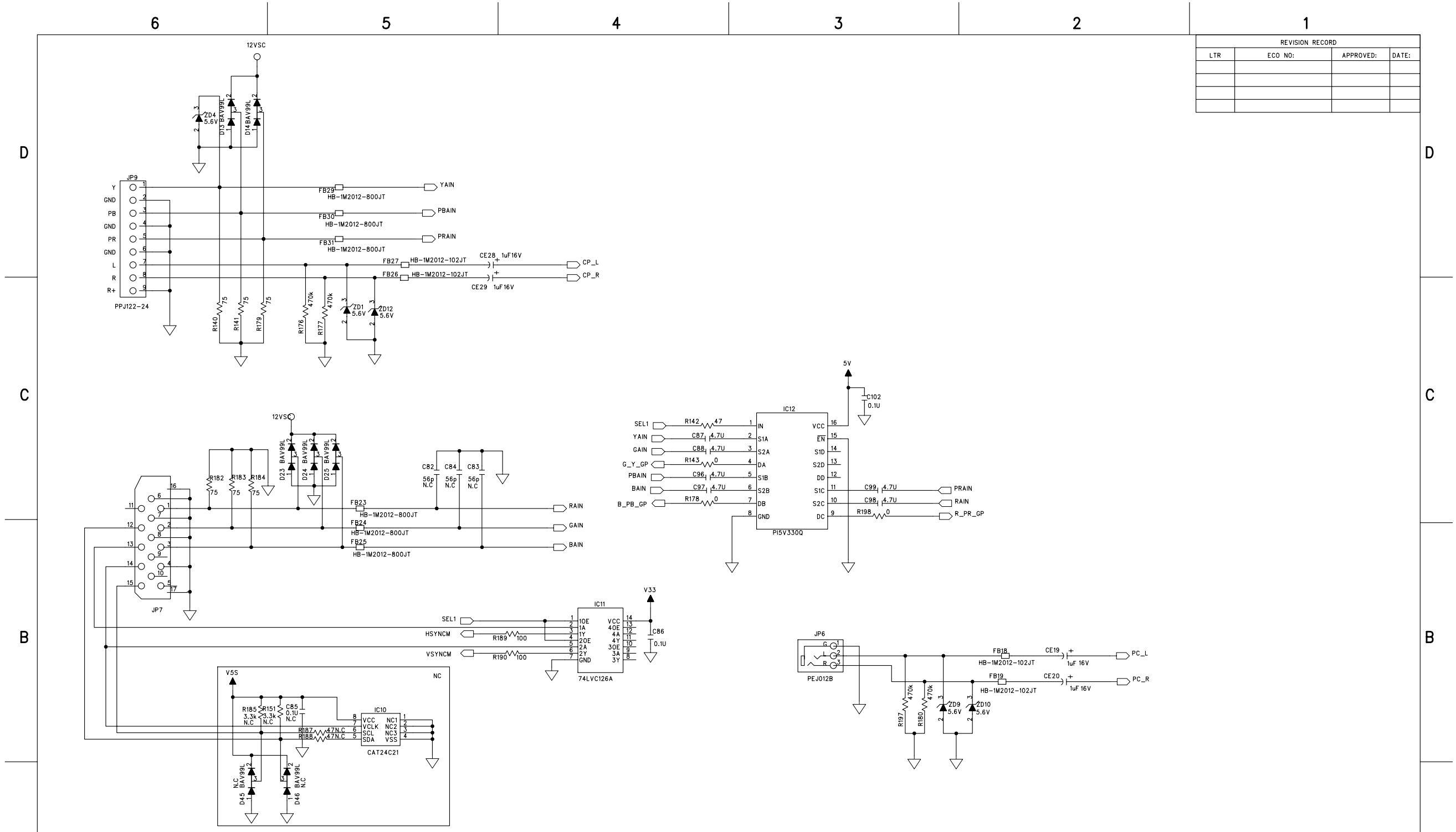

COMPANY: WooSungNextier Corp.			
TITLE: RGB & COMPONENT			
DRAWN: Lee Je Un	DATED:		
CHECKED:	DATED:	CODE:	SIZE:	DRAWING NO:	REV:
QUALITY CONTROL:	DATED:		
RELEASED:	DATED:	SCALE:	SHEET: 12 OF 12