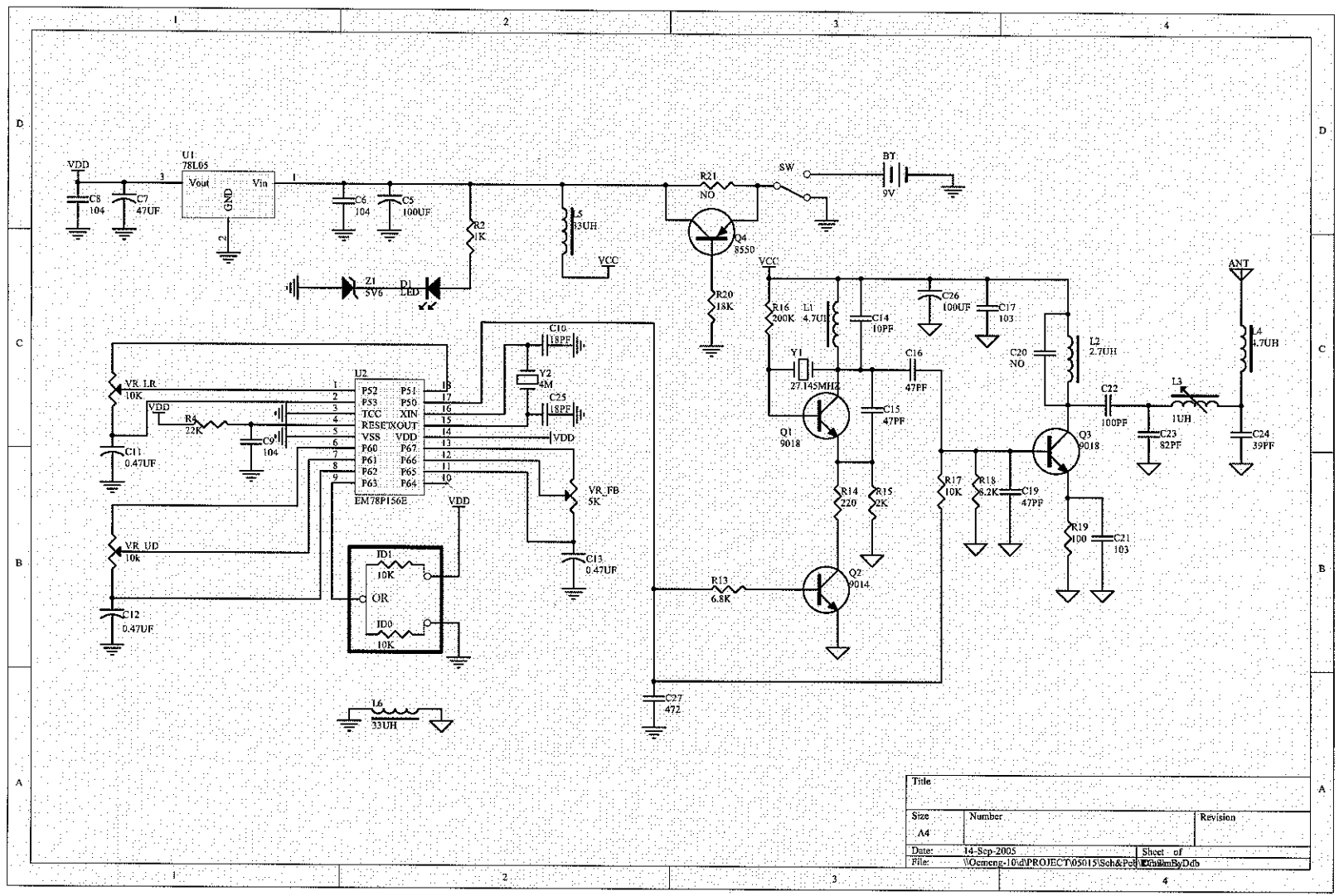
U1
78L05
Vout
Vin
GND
VDD
C8
104
C7
47UF
C6
104
C5
100UF
R2
1K
L5
33UH
VCC
Z1
5V6
D1
LED
R21
NO
Q4
8550
R20
18K
SW
BT
9V
R16
200K
L1
4.7UH
C14
10PF
C26
100UF
C17
103
Y1
27.145MHZ
C16
47PF
C15
47PF
Q1
9018
R14
220
R15
2K
R13
6.8K
Q2
9014
R17
10K
R18
8.2K
C19
47PF
Q3
9018
R19
100
C21
103
C20
NO
L2
2.7UH
C22
100PF
L3
1UH
C23
82PF
ANT
L4
4.7UH
C24
39PF
C10
18PF
Y2
4M
C25
18PF
U2
P52
P53
TCC
RESET
VSS
P60
P61
P62
P63
P51
P50
XIN
XOUT
VDD
P67
P66
P65
P64
EM78P156E
VR_LR
10K
R4
22K
C9
104
C11
0.47UF
VR_UD
10k
C12
0.47UF
VR_FB
5K
C13
0.47UF
ID1
10K
OR
ID0
10K
L6
33UH
C27
472
Title
Size
A4
Number
Revision
Date:
14-Sep-2005
File:
Sheet of