C 101-452-3

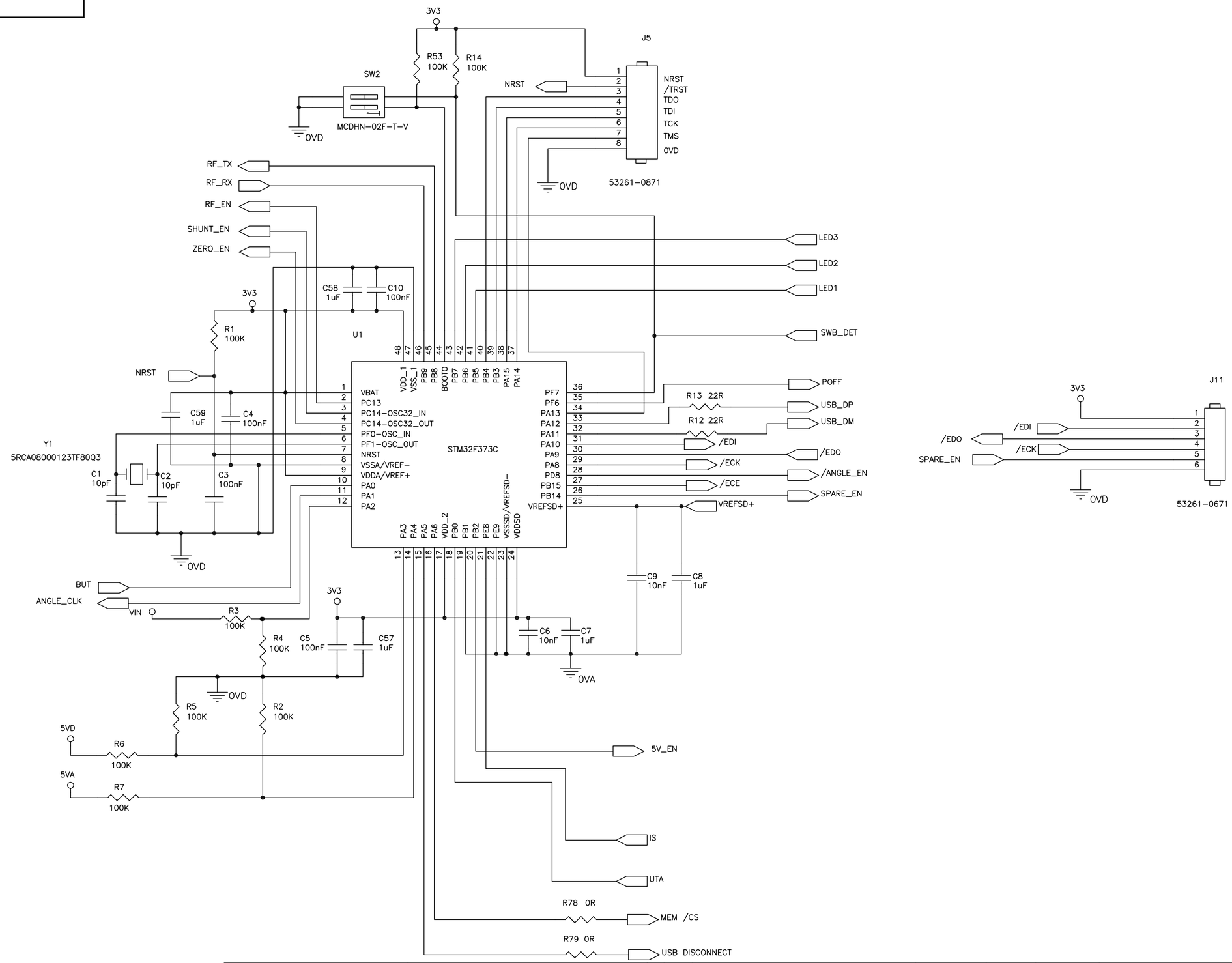

TOLERANCES UNLESS STATED
X. ±0.5 ANGLES ±0.5°
.X ±0.2
.XX ±0.1
THREADS TO BS3643 COARSE 6H/6g FIT
DIMENSIONS IN MILLIMETRES

ISS	C.R.I.	MODIFICATION DETAIL	
A	---	NEW DRAWING	
B	2933	UPDATED SCHEMATIC	RP 23.07.13
C	2950	UPDATED SCHEMATIC	RP 19.11.13

DRAWN	RP	04.07.13
CHECKED		
CADFILE		

TITLE DATA COLLECTOR TRANSDUCER MODULE PROCESSOR SCHEMATIC

SCALE N.T.S

THIRD ANGLE PROJECTION

No C 101-452-3

ISS C

© COPYRIGHT 2004
ALL RIGHTS RESERVED

REPRODUCTION OF ANY PART OF THIS DRAWING, WITHOUT PRIOR PERMISSION FROM CRANE ELECTRONICS LIMITED, IS FORBIDDEN