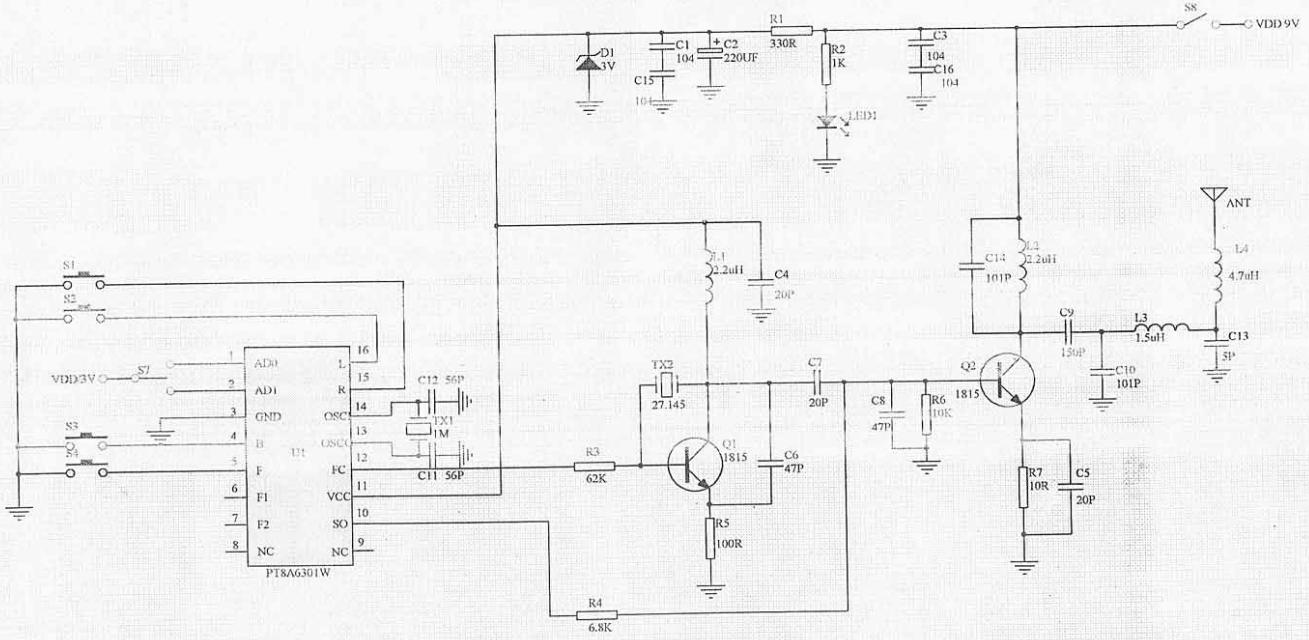

Title	CJ-125T 27M	
Size B	Number	Revision
Date: 11-Apr-2006		Sheet of
File: D:\PCB\ping\99PCB3\125.Ddb		Drawn By: