Schematic Diagram

FCCID: T94BD-8008T Model No.: BD- 8008T

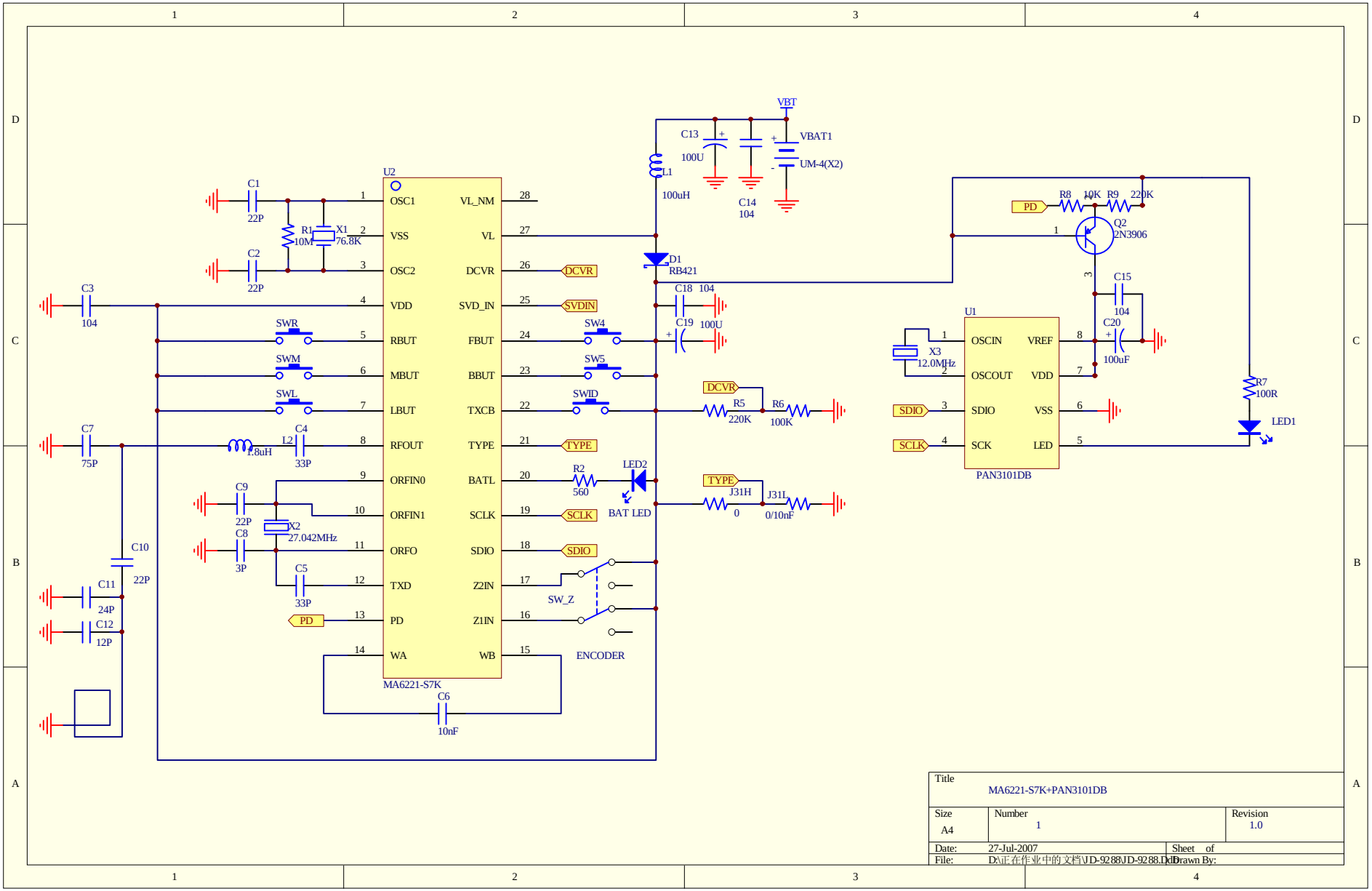

Title	MA6221-S7K+PAN3101DB	
Size A4	Number 1	Revision 1.0
Date: 27-Jul-2007		Sheet of
File: D:\正在作业中的文档\JD-9288\JD-9288.DDB		Drawn By: