REV	DETAIL OF CHANGE	DATE	RELASED BY	AGREED BY

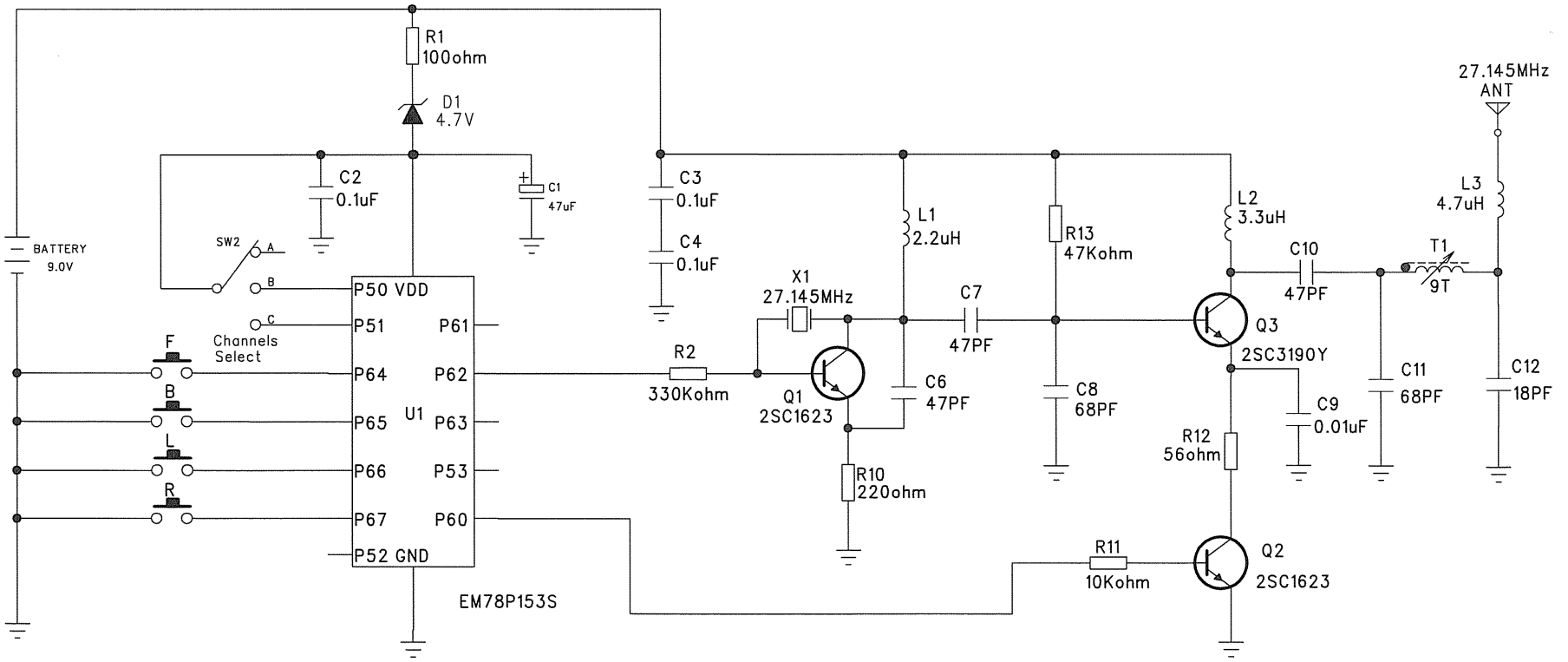

Model No: #60105 Project: TELECONTROL AIR BED CAR Drawn by: LSL	DEKKO TOSY COMPANY LTD
SheeFile Name:	Sheet Title: TX
	Size: A4 Document Number: Rev.:
	Sheet Creation date: SHEET 1 OF 1